GENERAL NOTES

STRUCTURE EXCAVATION AND BACKFILL SHALL BE AS SHOWN ON THE PLANS, EXCEPT SHORING MAY BE REQUIRED FOR EXCAVATION ADJACENT TO THE EXISTING ROADWAY. TEMPORARY EXCAVATION SUPPORT SHALL BE PAID FOR BY ITEM 206 SHORING.

EXPANSION JOINT MATERIAL SHALL MEET AASHTO SPECIFICATION M213.

ALL STRUCTURAL CONCRETE SHALL CONFORM TO CEMENTITIOUS MATERIALS REQUIREMENTS CORRESPONDING TO SULFATE EXPOSURE CLASS 0.

A COLORED STRUCTURAL CONCRETE COATING FINISH WILL BE REQUIRED, AS SHOWN ON THE PLANS, ON EXPOSED CONCRETE SURFACES. THE COLORS SHALL BE EQUIVALENT TO FEDERAL STANDARD 595, COLOR NO. 31667, COLOR NO. 33617 (SAND) AND COLOR NO. 30219 (TAN), AND ARE TO BE SELECTED FROM TEST PANELS PROVIDED BY THE CONTRACTOR.

THE FINAL FINISH FOR THE SURFACES OF THE TYPE 7 BRIDGE RAIL AND CURBS SHALL BE CLASS 2. ALL OTHER EXPOSED CONCRETE SURFACES SHALL RECEIVE A CLASS 1 FINAL FINISH TO ONE FOOT BELOW THE GROUND LINE.

LEVELING PADS ARE UNLAMINATED BEARINGS. THEY SHALL BE CUT OR MOLDED FROM AASHTO ELASTOMER GRADE 3, 4, OR 5 AS DESCRIBED IN TABLES 705-1 AND 705-2 WITH A DUROMETER (SHORE "A") HARDNESS OF 60.

GRADE 60 REINFORCING STEEL IS REQUIRED.

ALL REINFORCEMENT SHALL HAVE A CLEAR COVERAGE OF 2 INCHES, EXCEPT AS SHOWN ON THE PLANS. CLEAR COVERAGE SHALL BE MEASURED FROM THE SURFACE OF THE CONCRETE TO THE OUTSIDE OF THE REINFORCEMENT.

ALL APPROVED MECHANICAL COUPLERS SHALL BE CAPABLE OF DEVELOPING 125% OF REINFORCING STEEL TENSILE STRENGTH. THE CONTRACTOR SHALL SUBMIT A CERTIFICATION OF THE MECHANICAL COUPLERS TO THE ENGINEER PRIOR TO THE INSTALLATION.

ALL REINFORCING STEEL SHALL BE EPOXY COATED UNLESS OTHERWISE NOTED.

Ⓝ DENOTES NON COATED REINFORCING STEEL.

ALL THE PROVISIONS FOR BRIDGE DECK CONCRETE SHALL ALSO APPLY TO APPROACH SLAB CONCRETE.

AN EMERGENCY DECK CONSTRUCTION JOINT MAY BE LOCATED AT THE ONE QUARTER SPAN POINT BACK FROM A PIER OR ABUTMENT WITH RESPECT TO THE DIRECTION OF THE DECK PLACEMENT.

THE CONTRACTOR SHALL BE RESPONSIBLE FOR THE STABILITY OF THE STRUCTURE DURING ALL PHASES OF CONSTRUCTION.

PERMANENT DECK FORMS ARE REQUIRED.

FOR STRUCTURE NUMBER INSTALLATION, SEE STANDARD S-614-12.

STATIONS, ELEVATIONS, AND DIMENSIONS CONTAINED IN THESE PLANS ARE CALCULATED FROM A RECENT FIELD SURVEY. THE CONTRACTOR SHALL VERIFY ALL DEPENDENT DIMENSIONS IN THE FIELD BEFORE ORDERING OR FABRICATING ANY MATERIAL.

ALL LONGITUDINAL AND TRANSVERSE DIMENSIONS ARE MEASURED HORIZONTALLY AND INCLUDE NO CORRECTION FOR GRADE.

THE INFORMATION SHOWN ON THESE PLANS CONCERNING THE TYPE AND LOCATION OF UNDERGROUND UTILITIES IS NOT GUARANTEED TO BE ACCURATE OR ALL INCLUSIVE. THE CONTRACTOR IS RESPONSIBLE FOR MAKING HIS OWN DETERMINATION AS TO THE TYPE AND LOCATION OF UNDERGROUND UTILITIES AS MAY BE NECESSARY TO AVOID DAMAGE THERETO. THE CONTRACTOR SHALL CONTACT THE UTILITY NOTIFICATION CENTER OF COLORADO AT 811 (1-800-922-1987) AT LEAST 3 DAYS (2 DAYS NOT INCLUDING THE DAY OF NOTIFICATION) PRIOR TO ANY EXCAVATION OR OTHER EARTHWORK.

ABBREVIATIONS

BF = BACK FACE
FF = FRONT FACE
EF = EACH FACE
BRG = BEARING
HCL = HORIZONTAL CONTROL LINE
EL = ELEVATION
TYP = TYPICAL
CONT = CONTINUOUS
SPA = SPACING
TAN = TANGENT
SHLD = SHOULDER
TOT = TOTAL

DESIGN DATA

AASHTO LRFD BRIDGE DESIGN SPECIFICATIONS, EIGHTH EDITION.

DESIGN METHOD: LOAD AND RESISTANCE FACTOR DESIGN

LIVE LOAD: HL-93 (DESIGN TRUCK OR TANDEM, AND DESIGN LANE LOAD)
CDOT PERMIT VEHICLE

DEAD LOAD: ASSUMES 36 LBS. PER SQ. FT. FOR BRIDGE DECK OVERLAY
ASSUMES 5 LBS. PER SQ. FT. FOR PERMANENT STEEL DECK FORMS

REINFORCED CONCRETE:
CLASS B CONCRETE: F'C = 4,500 PSI
CLASS D CONCRETE: F'C = 4,500 PSI
REINFORCING STEEL: FY = 60,000 PSI

CAISSON CONCRETE:
CLASS BZ CONCRETE: F'C = 4,000 PSI
REINFORCING STEEL: FY = 60,000 PSI

PRECAST PRESTRESSED CONCRETE:
CLASS PS CONCRETE: F'C = (SEE DETAILS)
PRESTRESSING STRAND: F'S = 270,000 PSI

STEEL PILING: AASHTO M270 (ASTM A709) GRADE 50, FY = 50,000 PSI

STRUCTURAL STEEL: AASHTO M270 (ASTM A709) GRADE 50, FY = 50,000 PSI

LIVE LOAD DISTRIBUTION FACTORS

GIRDER NO.	SHEAR LLDF		NEGATIVE MOMENT LLDF		POSITIVE MOMENT LLDF	
	1 LANE	2+LANE	1 LANE	2+LANE	1 LANE	2+LANE
1 & 21	0.64	0.59	0.64	0.59	0.64	0.58
2-20	0.68	0.81	0.45	0.64	0.45	0.64

SEISMIC DESIGN CRITERIA

LATITUDE = 39.5645
LONGITUDE = -105.0333

AASHTO SPECTRUM FOR 7% PE IN 75 YEARS (1000YR RETURN PERIOD)

PERIOD (SEC)	SA (G)
0.0	0.060 PGA - SITE CLASS B
0.2	0.128 SS - SITE CLASS B
1.0	0.034 S1 - SITE CLASS B

SPECTRAL RESPONSE ACCELERATIONS:
AS = FPGA*PGA, SDS = FA*SS, AND SD1 = FV*S1
FPGA = 2.5, FA = 2.5, FV = 3.5

PERIOD (SEC)	SA (G)
0.0	0.150 AS - SITE CLASS E
0.2	0.320 SDS - SITE CLASS E
1.0	0.121 SD1 - SITE CLASS E

SEISMIC ZONE OR SEISMIC DESIGN CATEGORY: ZONE = 1

Know what's below.
Call before you dig.

XX — SECTION OR DETAIL IDENTIFICATION
BXX — CROSS REFERENCE DRAWING NUMBER
(IF BLANK OR DASH, REFERENCE IS TO SAME SHEET)

INDEX OF DRAWINGS

B1 GENERAL NOTES
B2 SUMMARY OF APPROXIMATE QUANTITIES
B3 GENERAL LAYOUT
B4 TYPICAL SECTION
B5 CONSTRUCTION PHASING (1 OF 2)
B6 CONSTRUCTION PHASING (2 OF 2)
B7 ENGINEERING GEOLOGY
B8 CONSTRUCTION LAYOUT
B9 FOUNDATION LAYOUT
B10 FOUNDATION DETAILS (1 OF 2)
B11 FOUNDATION DETAILS (2 OF 2)
B12 MSE WALL PLAN AND ELEVATION ABUT 1
B13 MSE WALL PLAN AND ELEVATION ABUT 3
B14 MSE WALL ENGINEERING GEOLOGY ABUT 1
B15 MSE WALL ENGINEERING GEOLOGY ABUT 2
B16 MSE WALL GEOTECHNICAL DETAILS (1 OF 3)
B17 MSE WALL GEOTECHNICAL DETAILS (2 OF 3)
B18 MSE WALL GEOTECHNICAL DETAILS (3 OF 3)
B19 MSE WALL PANEL DETAILS
B20 ABUTMENT BACKFILL DETAILS
B21 ABUTMENT 1 PLAN & ELEVATION
B22 ABUTMENT 3 PLAN & ELEVATION
B23 ABUTMENT DETAILS
B24 PIER 2 PLAN & ELEVATION
B25 PIER 2 DETAILS (1 OF 2)
B26 PIER 2 DETAILS (2 OF 2)
B27 PRESTRESSED CONCRETE I GIRDER
B28 INTERMEDIATE DIAPHRAGMS
B29 TYPICAL DECK SECTION
B30 DECK REINFORCING PLAN
B31 APPROACH SLAB (1 OF 2)
B32 APPROACH SLAB (2 OF 2)
B33 APPROACH SLAB INLET DETAILS
B34 BRIDGE EXPANSION DECIVE (0 - 4 INCH) (1 OF 3)
B35 BRIDGE EXPANSION DECIVE (0 - 4 INCH) (2 OF 3)
B36 BRIDGE EXPANSION DECIVE (0 - 4 INCH) (3 OF 3)
B37 BRIDGE RAIL TYPE 7
B38 BRIDGE RAIL TRANSITION
B39 FENCE CHAIN LINK (36 INCH)
B40 FENCE CHAIN LINK (SPECIAL) (60 INCH)
B41 FENCE CHAIN LINK (SPECIAL) (60 INCH) DETAILS
B42 MISCELLANEOUS DETAILS
B43 DECK ELEVATIONS (1 OF 5)
B44 DECK ELEVATIONS (2 OF 5)
B45 DECK ELEVATIONS (3 OF 5)
B46 DECK ELEVATIONS (4 OF 5)
B47 DECK ELEVATIONS (5 OF 5)

BRIDGE DESCRIPTION

2-SPAN (95'-3", 95'-3") BRIDGE
CONTINUOUS CONCRETE PRESTRESSED GIRDERS
US85 OVER C-470, US85 MP 200.36
12'-6" SIDEWALK
162'-6" FACE TO FACE OF BRIDGE RAIL
165'-6" OUT TO OUT
BRIDGE RAIL TYPE 7
12'-6" SIDEWALK, 4'-0" & 22'-0" MEDIANS
SKEW: 70° 00'32"

Design	INITIAL	DATE	Detail	INITIAL	DATE	Quantities	INITIAL	DATE
Designed By	DRH	2/2019	Detailed By	KBK	2/2019	Quantities By	CMA	2/2019
Checked By	SPD	2/2019	Checked By	TLP	2/2019	Checked By	TLP	2/2019

pw:\\FWAPPDMA001:NorthCentral_Omaha\Documents\200020\CDN0099931\0000000002259892\6.0_CAD_BIM\6.2_Work_In_Progress\NEPA Re-Eval Task\Bridge\Drawings\US85_NEPA_BRDG_GENERAL INFORMATION.dgn

DMADDOCK 2:49:59 PM

Print Date: 4/15/2021
File Name: US85_NEPA_BRDG_GENERAL INFORMATION.dgn
Horiz. Scale: 1:1 Vert. Scale: As Noted

HDR
1670 BROADWAY, SUITE 3400 DENVER, COLORADO 80202
Phone: 303-764-1520 FAX: 303-860-7139

Sheet Revisions

Date:	Comments	Init.

DOUGLAS COUNTY COLORADO
Department of Public Works Phone: 303-660-7490
Engineering Division Fax: 303-660-9550
100 Third Street
Castle Rock, CO 80104

As Constructed
No Revisions:
Revised:
Void:

US 85 OVER C-470
GENERAL INFORMATION

Designer: D HOBBS
Detailer: KATHRINEBERG
Sheet Subset: BRIDGE
Structure Numbers: F-16-ICA
Subset Sheets: 1 of 47

Project No./Code
0852-114
23474
Sheet Number 257

ITEM NO.	ITEM	UNIT	SUPER-STRUCTURE	SUBSTRUCTURE			APPROACH SLABS	TOTALS
				ABUT 1	PIER 2	ABUT 3		
202-00400	REMOVAL OF BRIDGE	EA	-	-	-	-	-	1
206-00000	STRUCTURE EXCAVATION	CY	-	3848	515	1587	-	5951
206-00065	STRUCTURE BACKFILL (FLOW-FILL)	CY	-	-	-	30	-	30
206-00100	STRUCTURE BACKFILL CLASS 1	CY	-	1929	391	1437	-	3757
206-00200	STRUCTURE BACKFILL CLASS 2	CY	-	206	-	4	-	210
206-00360	MECHANICAL REINFORCEMENT OF SOIL	CY	-	2875	-	3272	-	6147
403-09210	STONE MATRIX ASPHALT	TON	433	-	-	-	100	533
420-00000	GEOMEMBRANE	SY	-	713	-	808	-	1521
502-11274	STEEL PILING (HP12X74)	LF	-	1668	-	1572	-	3240
503-00054	DRILLED CAISSON (54 INCH)	LF	-	-	494	-	-	494
503-00310	CROSSHOLE SONIC LOGGING TESTING	EA	-	-	4	-	-	4
504-04420	PRECAST PANEL FACING	SF	-	4776	-	4872	-	9648
515-00120	WATERPROOFING (MEMBRANE)	SY	2625	-	-	-	608	3233
518-01004	BRIDGE EXPANSION DEVICE (0-4 INCH)	LF	344	-	-	-	-	344
601-03040	CONCRETE CLASS D (BRIDGE)	CY	1055	167	360	189	279	2050
601-40300	STRUCTURAL CONCRETE COATING	SY	1559	92	836	92	-	2580
602-00000	REINFORCING STEEL	LB	-	-	7617	-	-	7617
602-00020	REINFORCING STEEL (EPOXY COATED)	LB	321306	10803	70345	10803	50293	463551
606-10900	BRIDGE RAIL TYPE 9	LF	477	-	-	-	-	477
607-53136	FENCE CHAIN LINK (36 INCH)	LF	240	-	-	-	-	240
607-53161	FENCE CHAIN LINK (SPECIAL) (60 INCH)	LF	239	-	-	-	-	239
618-00142	PRESTRESSED CONCRETE I (BT 42)	LF	4000	-	-	-	-	4000

FOR CONDUIT QUANTITIES SEE ITS GENERAL NOTES AND QUANTITIES.

Design	INITIAL	DATE	Detail	INITIAL	DATE	Quantities	INITIAL	DATE
Designed By	DRH	2/2019	Detailed By	KBK	2/2019	Quantities By	CMA	2/2019
Checked By	SPG	2/2019	Checked By	TLP	2/2019	Checked By	TLP	2/2019

pw:\\PWAPPDMA001:North_Central_Omaha\Documents\200020\CDN0039931\0000000002593892\6.0_CAD_BIM\6.2_Work_In_Progress\NEPA Re-Eval Task\Bridge\Drawings\US85_NEPA_BRDG_BRIDGE_QUANTITIES.dgn

DMADDOCK 2:50:01 PM

Print Date: 4/15/2021
File Name: US85_NEPA_BRDG_BRIDGE_QUANTITIES.dgn
Horiz. Scale: 1:1 Vert. Scale: As Noted

HDR
1670 BROADWAY, SUITE 3400 DENVER, COLORADO 80202
Phone: 303-764-1520 FAX: 303-860-7139

Sheet Revisions		
Date:	Comments	Init.

DOUGLAS COUNTY COLORADO
Department of Public Works
Engineering Division
100 Third Street
Castle Rock, CO 80104
Phone: 303-660-7490
Fax: 303-660-9550

As Constructed
No Revisions:
Revised:
Void:

US 85 OVER C-470
SUMMARY OF APPROXIMATE BRIDGE QUANTITIES

Designer: D HOBBS
Detailer: KATHRINEBERG
Sheet Subset: BRIDGE
Structure Numbers: F-16-ICA
Subset Sheets: 2 of 47

Project No./Code
0852-114
23474
Sheet Number 258

Know what's below. Call before you dig.

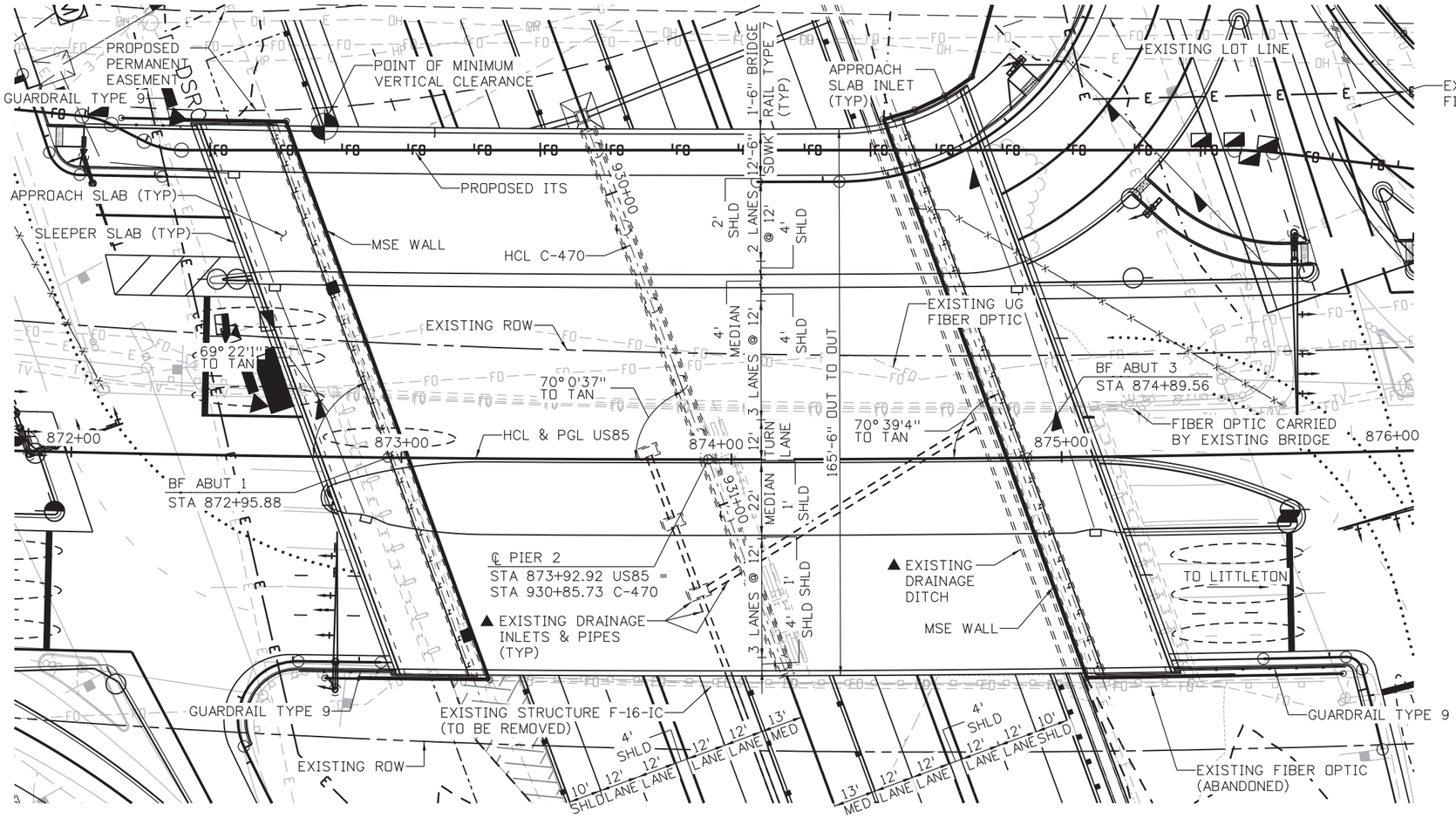

PLAN

HORIZONTAL CURVE DATA

PI STA 876+69.98
Δ = 11° 59'23" LT
Tc = 892.62'
Lc = 1778.72'
Rc = 8500.00'

▲ CONTRACTOR TO FIELD VERIFY EXISTING DRAINAGE LOCATIONS

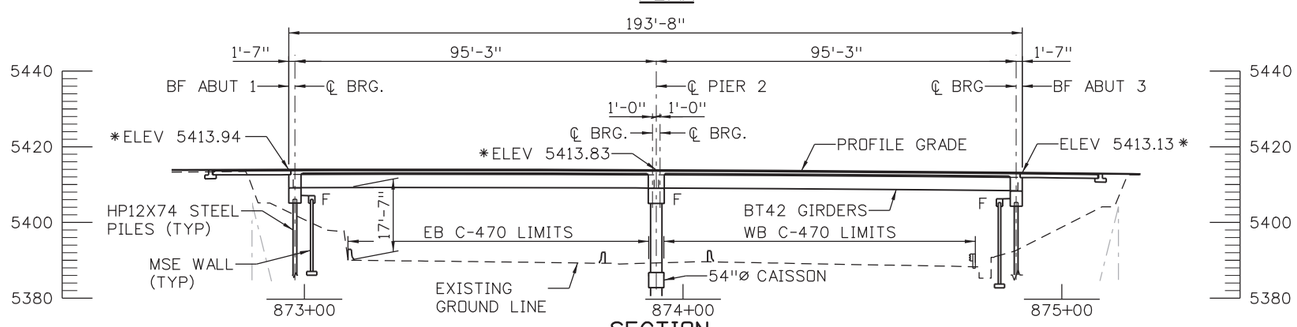

SECTION

(TAKEN ALONG BRIDGE LAYOUT LINE)
* FINISHED GRADE ELEVATIONS

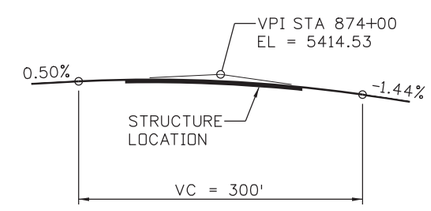

PROFILE GRADE

NOTES:

1. SEE CONSTRUCTION LAYOUT FOR BRIDGE LAYOUT LINE.

Design	INITIAL	DATE	Detail	INITIAL	DATE	Quantities	INITIAL	DATE
Designed By	DRH	2/2019	Detailed By	KBK	2/2019	Quantities By	CMA	2/2019
Checked By	SPG	2/2019	Checked By	TLP	2/2019	Checked By	TLP	2/2019

pw:\\PWAPPDMA001:North\Central_Omaha\Documents\2000220\DN0099931\0000000000259892\6.0_CAD_BIM\6.2_Work_In_Progress\NEPA Re-Eval Task\Bridge\Drawings\US85_NEPA_BRDG_GENLAYOUT.dgn

DMADDOCK 2:50:04 PM

Print Date: 4/15/2021
File Name: US85_NEPA_BRDG_GENLAYOUT.dgn
Horiz. Scale: 1:40 Vert. Scale: As Noted

HDR
1670 BROADWAY, SUITE 3400 DENVER, COLORADO 80202
Phone: 303-764-1520 FAX: 303-860-7139

Sheet Revisions		
Date:	Comments	Init.

DOUGLAS COUNTY COLORADO
Department of Public Works Phone: 303-660-7490
Engineering Division Fax: 303-660-9550
100 Third Street
Castle Rock, CO 80104

As Constructed
No Revisions:
Revised:
Void:

US 85 OVER C-470
GENERAL LAYOUT

Designer: D HOBBS
Detailer: KATHRINEBERG
Sheet Subset: BRIDGE
Structure Numbers: F-16-ICA
Subset Sheets: 3 of 47

Project No./Code
0852-114
23474
Sheet Number 259

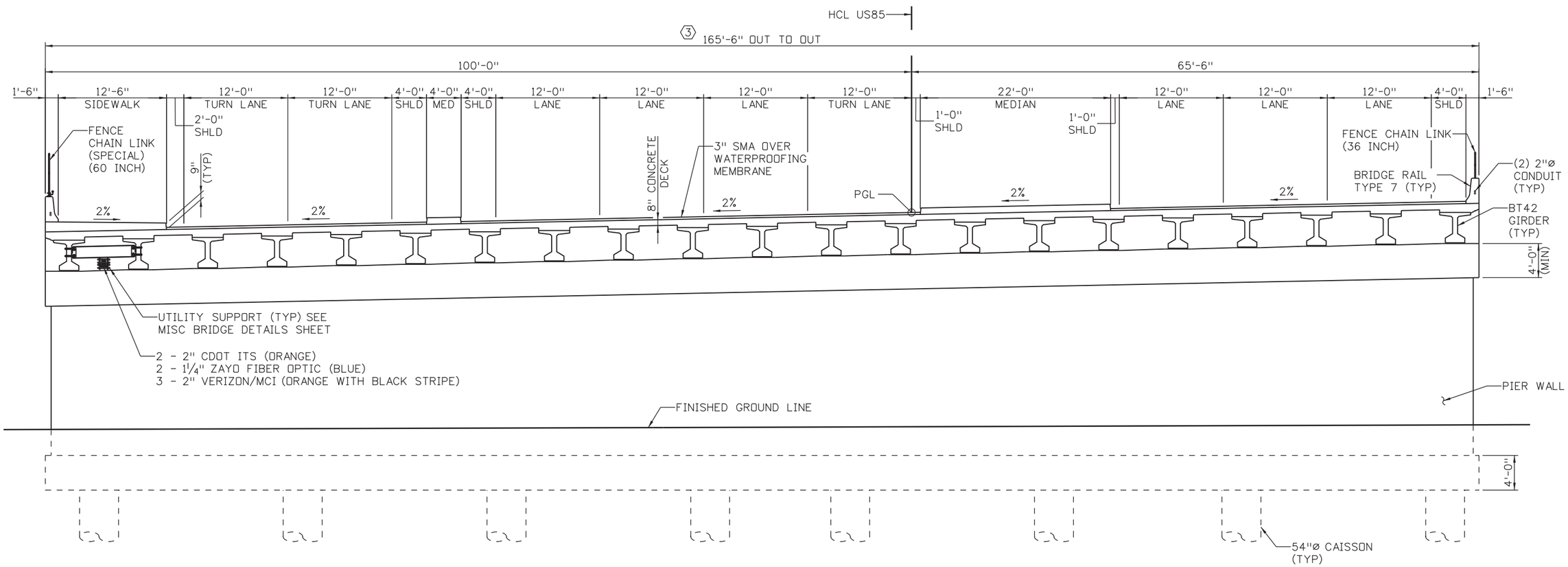

TYPICAL SECTION

SHOWN PERPENDICULAR TO HCL NEAR PIER 2

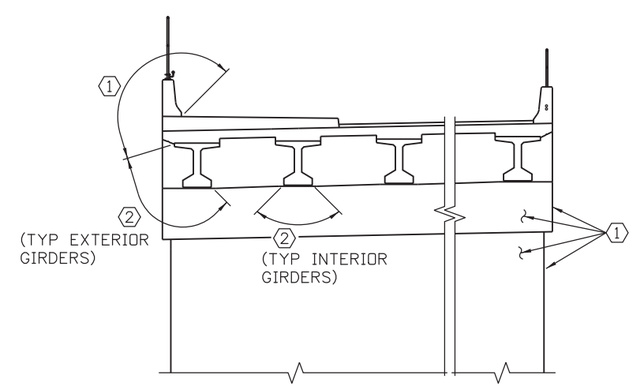

SUPERSTRUCTURE CONCRETE COATING DETAIL

KEYNOTES:

1. LIMITS OF STRUCTURAL CONCRETE COATING FEDERAL COLOR NO. 31667. EXTEND STRUCTURAL CONCRETE COATING 1'-0" BELOW FINISHED GRADE
2. LIMITS OF STRUCTURAL CONCRETE COATING FEDERAL COLOR NO. 30219
3. BRIDGE WIDTH VARIES NEAR ABUTMENT 3. SEE CONSTRUCTION LAYOUT FOR ADDITIONAL GEOMETRIC INFORMATION.

Design	INITIAL	DATE	Detail	INITIAL	DATE	Quantities	INITIAL	DATE
Designed By	DRH	2/2019	Detailed By	KBK	2/2019	Quantities By	CMA	2/2019
Checked By	SPD	2/2019	Checked By	TLP	2/2019	Checked By	TLP	2/2019

DMADDOCK 2:50:08 PM pw:\\PWAPPDMA001:NorthCentral_Umaha\Documents\200020\CON0099931\0000000000259892\6.0_CAD_BIM\6.2_Work_In_Progress\NEPA Re-Eval Task\Bridge\Drawings\US85_NEPA_BRDG_TYPSECTION.dgn

Print Date: 4/15/2021
File Name: US85_NEPA_BRDG_TYPSECTION.dgn
Horiz. Scale: 1:1 Vert. Scale: As Noted

HDR
1670 BROADWAY, SUITE 3400 DENVER, COLORADO 80202
Phone: 303-764-1520 FAX: 303-860-7139

Sheet Revisions		
Date:	Comments	Init.

DOUGLAS COUNTY COLORADO
Department of Public Works Phone: 303-660-7490
Engineering Division Fax: 303-660-9550
100 Third Street
Castle Rock, CO 80104

As Constructed
No Revisions:
Revised:
Void:

US 85 OVER C-470
TYPICAL SECTION

Designer:	C PERRY	Structure Numbers	F-16-ICA
Detailer:	KATHRINEBERG		
Sheet Subset:	BRIDGE	Subset Sheets:	4 of 47

Project No./Code
0852-114
23474
Sheet Number 260

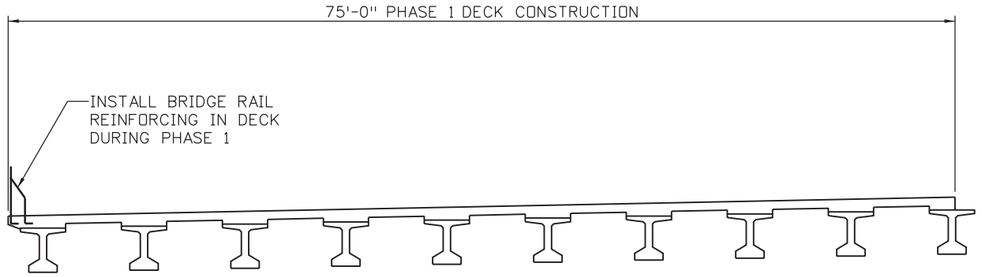

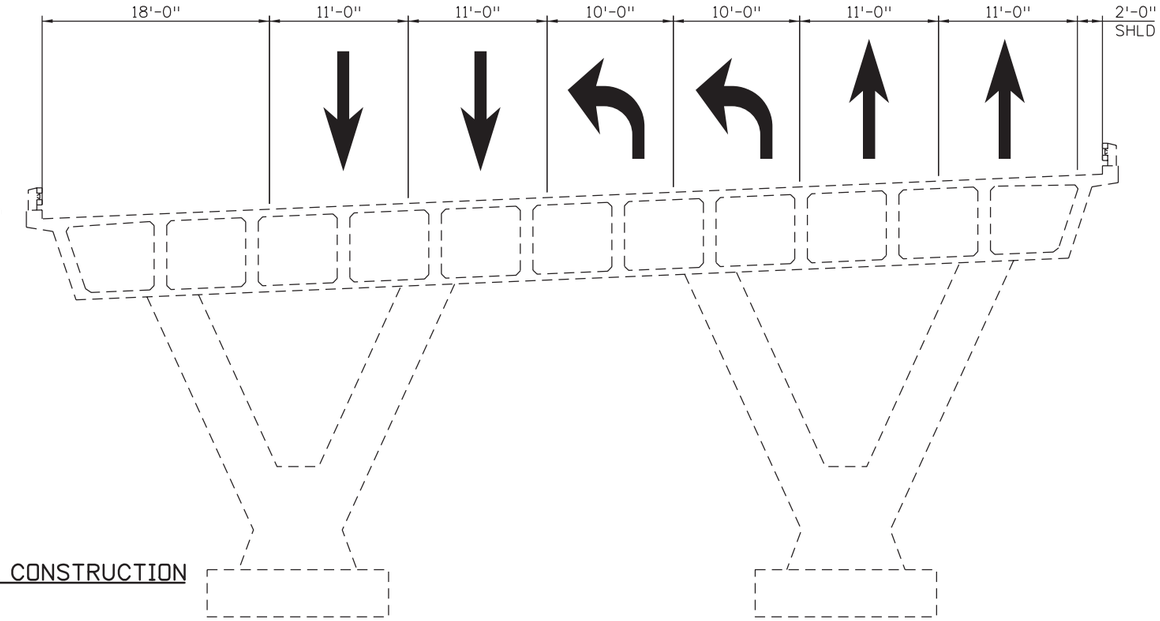

PHASE 1 CONSTRUCTION

PHASE 1 NOTES:

1. MAINTAIN TRAFFIC ON EXISTING STRUCTURE.
2. CONSTRUCT PHASE 1.

NOTES:

1. FOR ADDITIONAL INFORMATION ON ROADWAY PHASING, SEE PHASING PLANS.
2. CONTRACTOR IS RESPONSIBLE FOR COORDINATION OF UTILITIES SUPPORTED BY EXISTING BRIDGE DURING CONSTRUCTION.

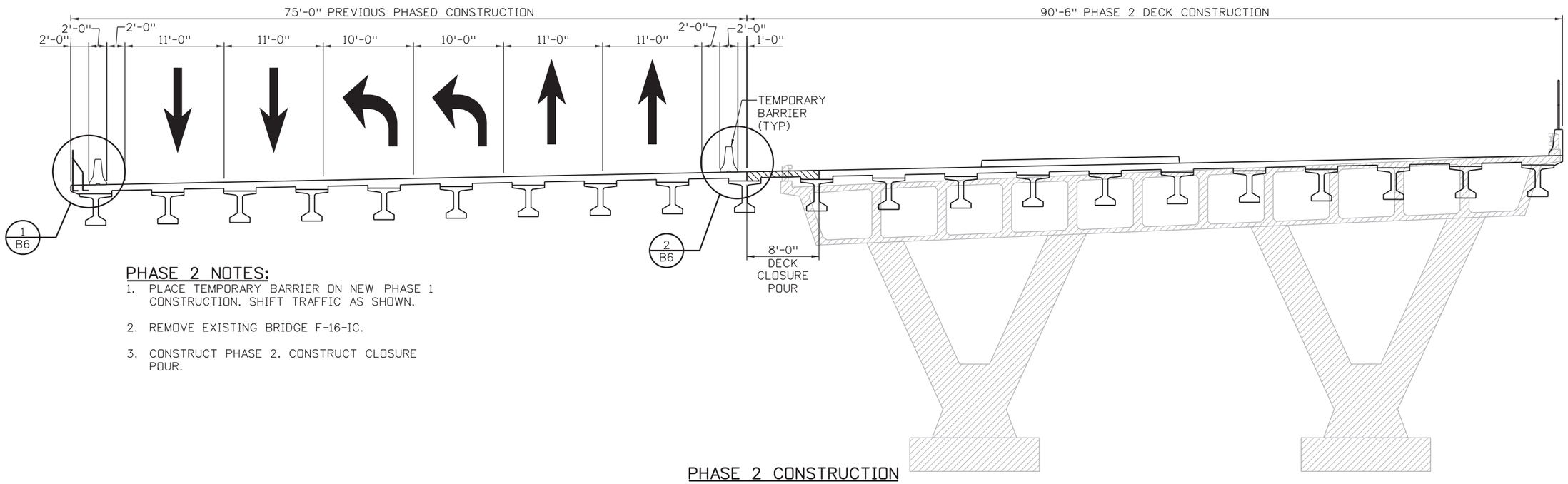

PHASE 2 CONSTRUCTION

PHASE 2 NOTES:

1. PLACE TEMPORARY BARRIER ON NEW PHASE 1 CONSTRUCTION. SHIFT TRAFFIC AS SHOWN.
2. REMOVE EXISTING BRIDGE F-16-IC.
3. CONSTRUCT PHASE 2. CONSTRUCT CLOSURE POUR.

Design	INITIAL	DATE	Detail	INITIAL	DATE	Quantities	INITIAL	DATE
Designed By	DRH	2/2019	Detailed By	KBK	2/2019	Quantities By	CMA	2/2019
Checked By	SPG	2/2019	Checked By	TLP	2/2019	Checked By	TLP	2/2019

DMADDOCK 2:50:10 PM pw:\\PWAPPDNA001:NorthCentral_Omaha\Documents\200020\CDN003993\00000000025989 2\6.0_CAD_BIM\6.2_Work_In_Progress\NEPA Re-Eval Task\Bridge\Drawings\US85_NEPA_BRDG_PHASING (1 OF 2).dgn

Print Date: 4/15/2021
File Name: US85_NEPA_BRDG_PHASING (1 OF 2).dgn
Horiz. Scale: 1:1 Vert. Scale: As Noted

HDR
1670 BROADWAY, SUITE 3400 DENVER, COLORADO 80202
Phone: 303-764-1520 FAX: 303-860-7139

Sheet Revisions		
Date:	Comments	Init.

DOUGLAS COUNTY COLORADO
Department of Public Works Phone: 303-660-7490
Engineering Division Fax: 303-660-9550
100 Third Street
Castle Rock, CO 80104

As Constructed
No Revisions:
Revised:
Void:

US 85 OVER C-470
CONSTRUCTION PHASING
(1 OF 2)

Designer: C PERRY
Detailer: KATHRINEBERG
Sheet Subset: BRIDGE
Structure Numbers: F-16-ICA
Subset Sheets: 5 of 47

Project No./Code
0852-114
23474
Sheet Number 261

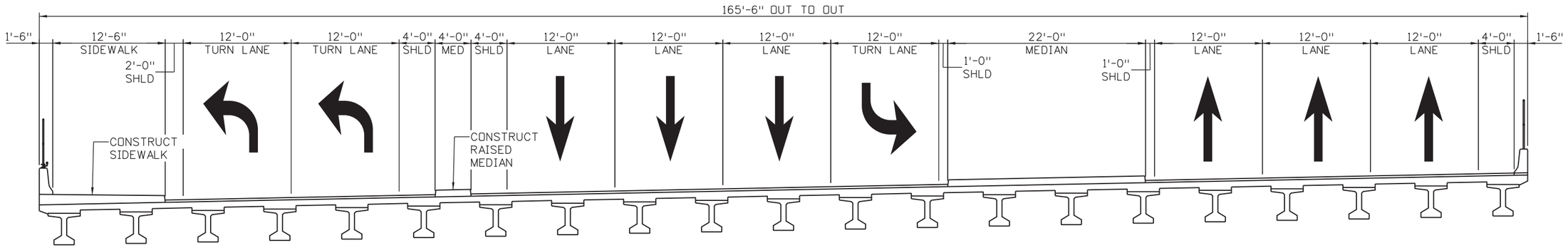

FINAL CONDITION

PHASING NOTES:

1. FOR ADDITIONAL INFORMATION ON ROADWAY PHASING, SEE PHASING PLANS.
2. CONTRACTOR IS RESPONSIBLE FOR COORDINATION OF UTILITIES SUPPORTED BY EXISTING BRIDGE DURING CONSTRUCTION.

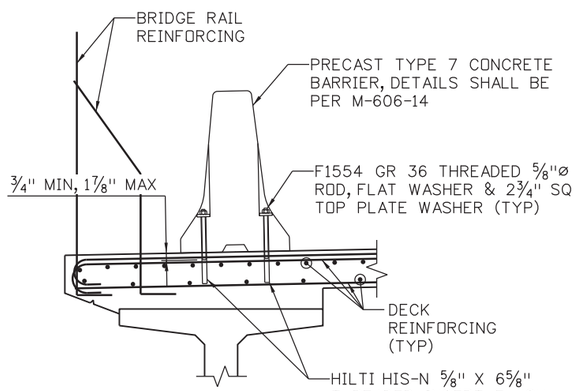

DETAIL 1/B5

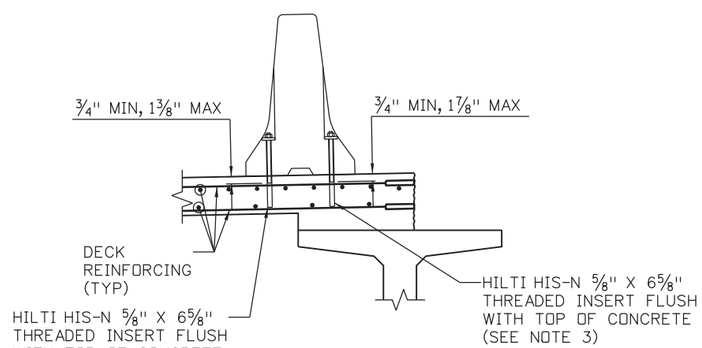

DETAIL 2/B5

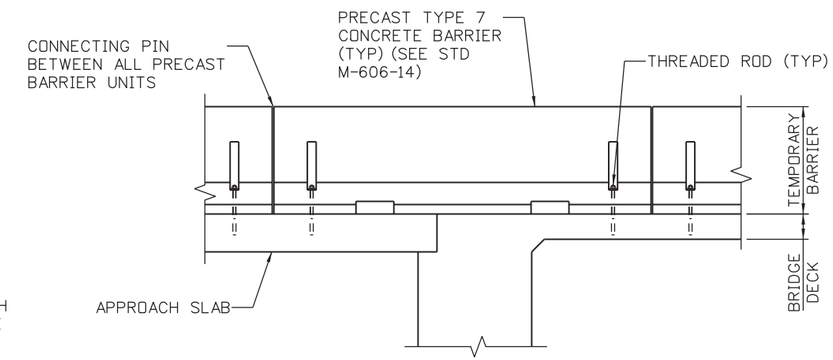

TEMPORARY BARRIER ANCHORAGE - PARTIAL ELEVATION

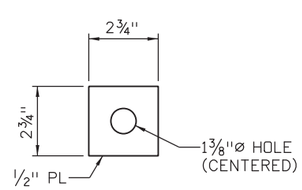

TOP PLATE WASHER

TEMPORARY BARRIER NOTES:

1. EPOXY ADHESIVE ANCHOR BOLTS SHALL BE FULLY THREADED RODS IN ACCORDANCE WITH ASTM F1554 GRADE 36. NUTS SHALL BE IN ACCORDANCE WITH ASTM A563 OR ASTM A194, FLAT WASHERS SHALL BE IN ACCORDANCE WITH ASTM F436 AND PLATE WASHERS SHALL BE IN ACCORDANCE WITH ASTM A36 OR ASTM A709 GRADE 36.
2. INSTALL (4) ANCHOR BOLTS PER PRECAST BARRIER UNIT AS SHOWN. SNUG TIGHTEN THE NUTS ON THE ANCHOR BOLTS. ALL BOLTS, NUTS AND WASHERS SHALL BE GALVANIZED.
3. THE CONTRACTOR SHALL USE HILTI-N ⅝" X 6⅝" THREADED INSERTS, AND 3.2.3 HIT-HY 200 EPOXY ADHESIVE OR OTHER ANCHOR AND BONDING AGENT APPROVED BY THE ENGINEER. INSTALL PER MANUFACTURER'S SPECIFIACTIONS.
4. UPON REMOVAL OF PRECAST BARRIER UNITS, REMOVE ALL ANCHOR BOLTS AND COMPLETELY FILL THE REMAINING HOLES IN BRIDGE DECK WITH GROUT MEETING THE REQUIREMENTS OF 618.09(B).

Design			Detail			Quantities		
	INITIAL	DATE		INITIAL	DATE		INITIAL	DATE
Designed By	DRH	2/2019	Detailed By	KBK	2/2019	Quantities By	CMA	2/2019
Checked By	SPD	2/2019	Checked By	TLP	2/2019	Checked By	TLP	2/2019

pw:\\PWAPPDMA001:North_Central_Omaha\Documents\200020\DN0039931\0000000002593892\6.0_CAD_BIM\6.2_Work_In_Progress\NEPA Re-Eval Task\Bridge\Drawings\US85_NEPA_BRDG_PHASING (2 OF 2).dgn

DMADDOCK 2:50:12 PM

Print Date: 4/15/2021
File Name: US85_NEPA_BRDG_PHASING (2 OF 2).dgn
Horiz. Scale: 1:1 Vert. Scale: As Noted

HDR
1670 BROADWAY, SUITE 3400 DENVER, COLORADO 80202
Phone: 303-764-1520 FAX: 303-860-7139

Sheet Revisions		
Date:	Comments	Init.

DOUGLAS COUNTY COLORADO
Department of Public Works Phone: 303-660-7490
Engineering Division Fax: 303-660-9550
100 Third Street
Castle Rock, CO 80104

As Constructed
No Revisions:
Revised:
Void:

US 85 OVER C-470
CONSTRUCTION PHASING
(2 OF 2)

Designer: C PERRY
Detailer: KATHRINEBERG
Sheet Subset: BRIDGE
Structure Numbers: F-16-ICA
Subset Sheets: 6 of 47

Project No./Code
0852-114
23474
Sheet Number 262

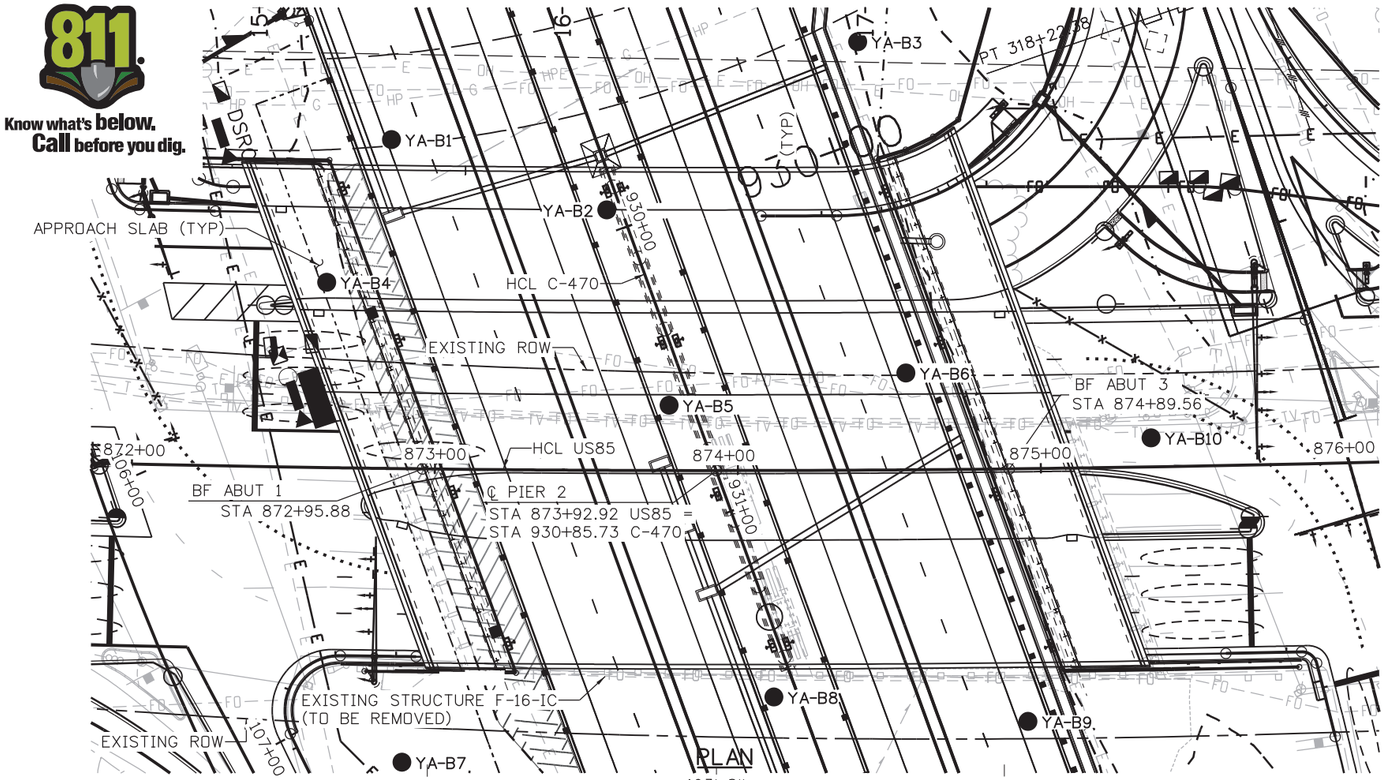

PLAN

Boring Location

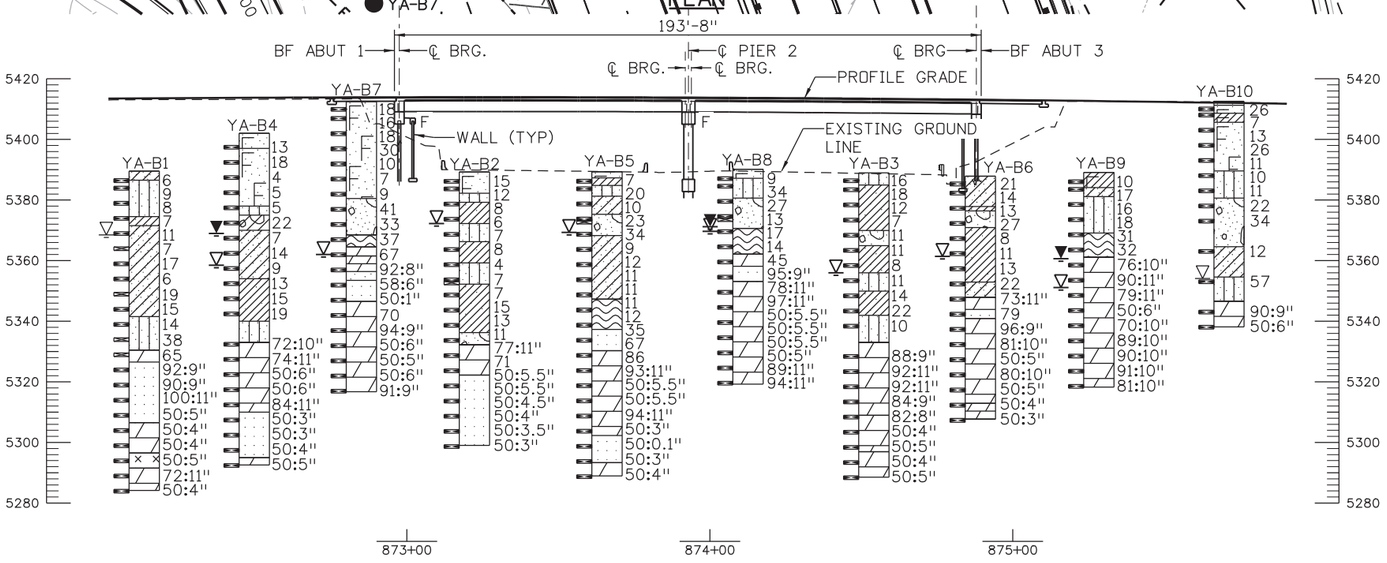

SECTION

LEGEND

- USCS Clayey Sand
- USCS Silty Sand
- USCS Low Plasticity Sandy Clay
- Fill with Sand as major soil
- USCS Poorly-graded Gravelly Sand
- USCS Poorly-graded Sandy Gravel
- USCS Clayey Gravel
- USCS Low Plasticity Clay
- Fill with Clay as major soil
- Claystone
- Sandstone
- Interbedded claystone and sandstone
- Weathered Bedrock
- Siltstone

TYPICAL BOREHOLE LOG

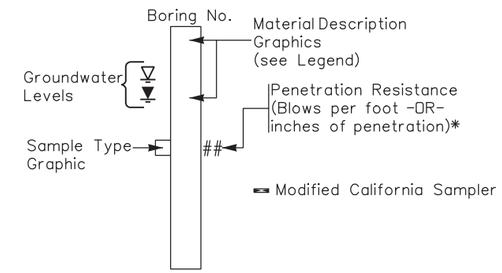

e.g. A value of 50/3 or 50:3 indicates that 50 blows were applied to the sampler, with a penetration of 3 inches.

Design			Detail			Quantities		
Designed By	INITIAL	DATE	Detailed By	INITIAL	DATE	Quantities By	INITIAL	DATE
Checked By			Checked By			Checked By		

pw:\\PWAPPDMA001:NorthCentral_Omaha\Documents\200020\CDN009993\0000000002598932\6.0_CAD_BIM\6.2_Work_In_Progress\NEPA Re-Eval Task\Materials_Geotechnical\Drawings\US85_NEPA_BRDG_ENGGED.dgn

DMADDOCK 2:50:15 PM

Print Date: 4/15/2021
File Name: US85_NEPA_BRDG_ENGGED.dgn
Horiz. Scale: 1:50 Vert. Scale: As Noted

Yeh and Associates, Inc.
Consulting Engineers & Scientists

Sheet Revisions		
Date:	Comments	Init.

DOUGLAS COUNTY
COLORADO

Department of Public Works
Engineering Division
100 Third Street
Castle Rock, CO 80104
Phone: 303-660-7490
Fax: 303-660-9550

As Constructed
No Revisions:
Revised:
Void:

US 85
ENGINEERING GEOLOGY

Designer: HCL
Detailer: MJW
Structure Numbers
Sheet Subset: BRIDGE
Subset Sheets: 7 of 47

Project No./Code
0852-114
23474
Sheet Number 263

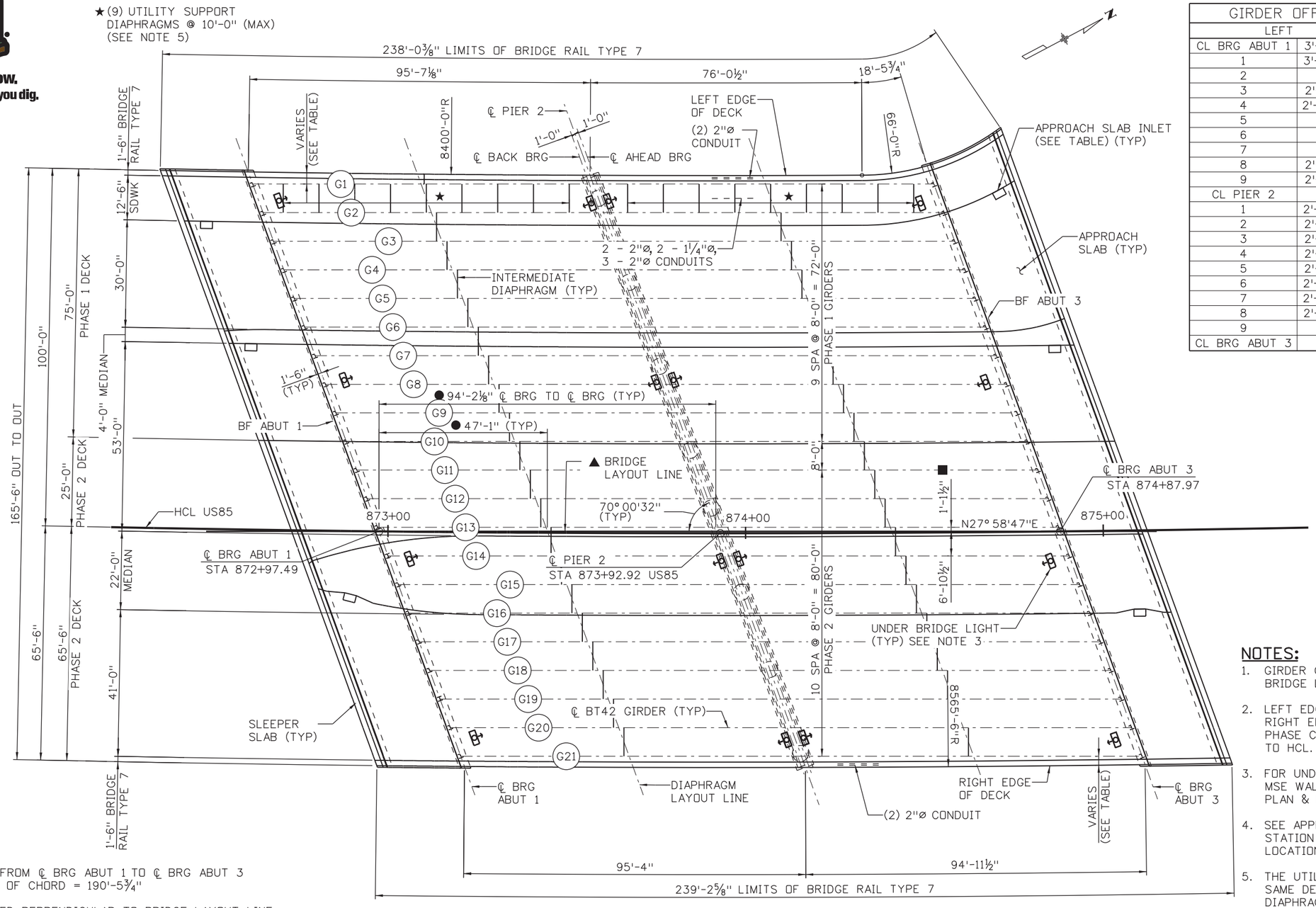

▲ CHORD FROM ℄ BRG ABUT 1 TO ℄ BRG ABUT 3
LENGTH OF CHORD = 190'-5¾"

■ MEASURED PERPENDICULAR TO BRIDGE LAYOUT LINE

● MEASURED ALONG BRIDGE LAYOUT LINE

CONSTRUCTION LAYOUT

GIRDER OFFSETS TO EDGE OF DECK			
LEFT		RIGHT	
CL BRG ABUT 1	3'-4 1/4"	CL BRG ABUT 1	2'-10 1/4"
1	3'-2 5/8"	1	2'-11 1/8"
2	3'-1"	2	2'-11 7/8"
3	2'-11 1/2"	3	3'-0 1/2"
4	2'-10 1/4"	4	3'-1 1/8"
5	2'-9"	5	3'-1 1/2"
6	2'-8"	6	3'-1 3/4"
7	2'-7"	7	3'-1 7/8"
8	2'-6 1/4"	8	3'-1 7/8"
9	2'-5 1/2"	9	3'-1 3/4"
CL PIER 2	2'-5"	CL PIER 2	3'-1 1/2"
1	2'-4 5/8"	1	3'-1 1/8"
2	2'-4 1/4"	2	3'-0 5/8"
3	2'-4 1/8"	3	3'-0"
4	2'-4 1/8"	4	2'-11 1/4"
5	2'-4 1/4"	5	2'-10 3/8"
6	2'-4 3/8"	6	2'-9 3/8"
7	2'-4 3/4"	7	2'-8 1/4"
8	2'-5 3/8"	8	2'-7"
9	3'-4"	9	2'-5 5/8"
CL BRG ABUT 3	5'-8"	CL BRG ABUT 3	2'-4 1/8"

APPROACH SLAB INLETS	
STA	OFFSET
872+47.80	86.00' LT
872+60.90	52.00' LT
872+89.75	17.68' RT
874+71.34	95.45' LT
874+87.00	52.00' LT
875+09.93	22.00' RT

NOTES:

1. GIRDER CENTERLINES ARE PARALLEL TO BRIDGE LAYOUT LINE.
2. LEFT EDGE OF DECK (EXCEPT NW CORNER), RIGHT EDGE OF DECK, AND LONGITUDINAL PHASE CONSTRUCTION JOINTS ARE PARALLEL TO HCL.
3. FOR UNDER BRIDGE LIGHTING LOCATIONS, SEE MSE WALL PLAN & ELEVATION AND PIER 2 PLAN & ELEVATION SHEETS.
4. SEE APPROACH SLAB INLET DETAILS FOR STATION AND OFFSET CONTROL POINT LOCATION AND ADDITIONAL DETAILS.
5. THE UTILITY SUPPORT DIAPHRAGMS USES THE SAME DETAILS AS THE INTERMEDIATE DIAPHRAGMS SHOWN ON SHEET B28. THE CONTRACTOR CAN SUBMIT AN ALTERNATIVE SUPPORT SYSTEM FOR APPROVAL.

Know what's below. Call before you dig.

Design	INITIAL	DATE	Detail	INITIAL	DATE	Quantities	INITIAL	DATE
Designed By	DRH	2/2019	Detailed By	KBK	2/2019	Quantities By	CMA	2/2019
Checked By	SPD	2/2019	Checked By	TLP	2/2019	Checked By	TLP	2/2019

DMADDOCK 2:50:18 PM pw:\\PWAPPDMA001:NorthCentral_Omaha\Documents\200020\CDN009993\{00000000025989}\6.0_CAD_BIM\6.2_Work_In_Progress\NEPA Re-Eval Task\Bridge\Drawings\US85_NEPA_BRDG_ConstLayout.dgn

Print Date: 4/15/2021
File Name: US85_NEPA_BRDG_ConstLayout.dgn
Horiz. Scale: 1:30 Vert. Scale: As Noted

HDR
1670 BROADWAY, SUITE 3400 DENVER, COLORADO 80202
Phone: 303-764-1520 FAX: 303-860-7139

Sheet Revisions		
Date:	Comments	Init.

DOUGLAS COUNTY COLORADO
Department of Public Works Phone: 303-660-7490
Engineering Division Fax: 303-660-9550
100 Third Street
Castle Rock, CO 80104

As Constructed
No Revisions:
Revised:
Void:

US 85 OVER C-470
CONSTRUCTION LAYOUT

Designer: D HOBBS
Detailer: KATHRINEBERG
Sheet Subset: BRIDGE
Structure Numbers: F-16-ICA
Subset Sheets: 8 of 47

Project No./Code
0852-114
23474
Sheet Number 264

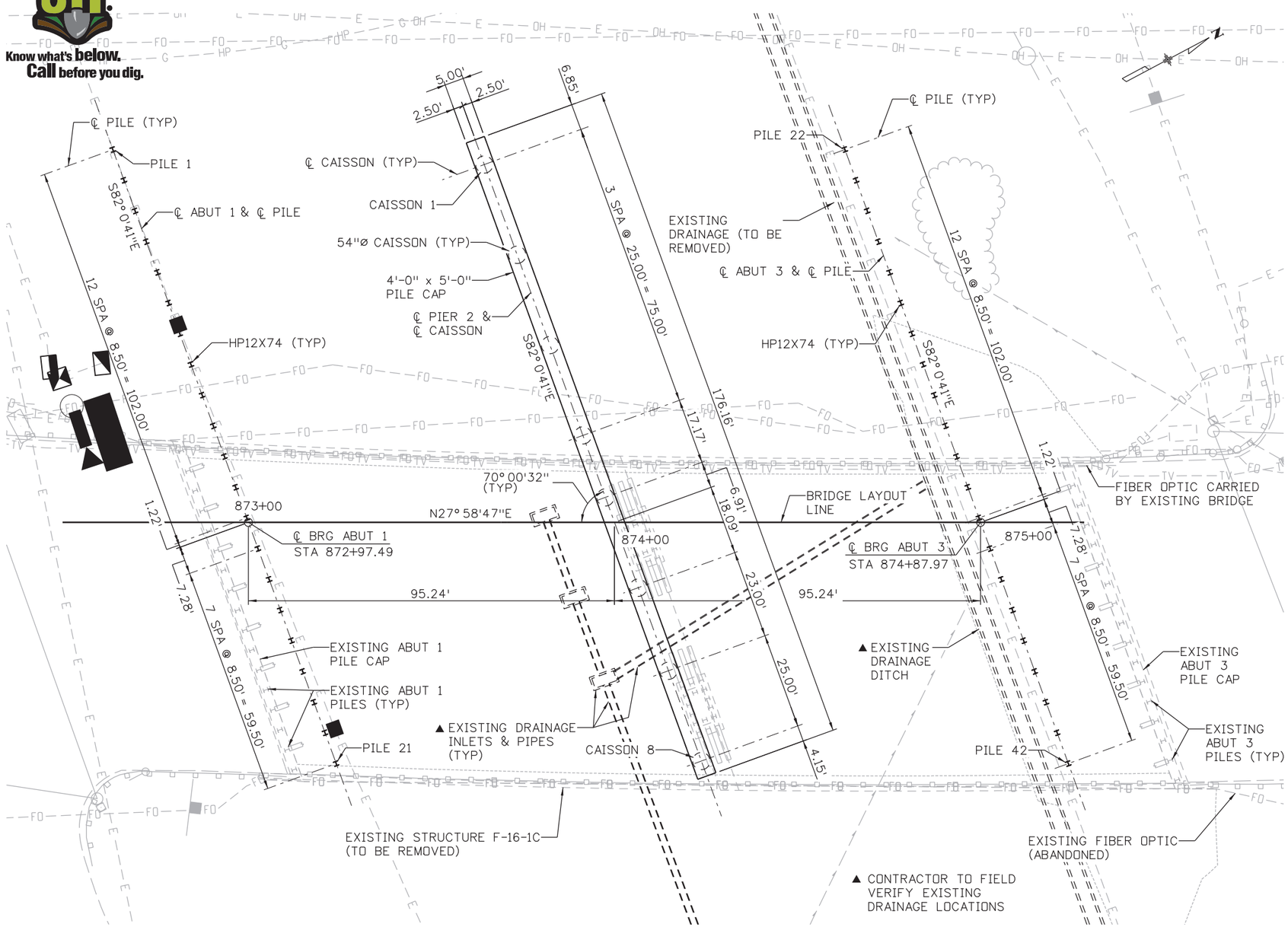

FOUNDATION LAYOUT

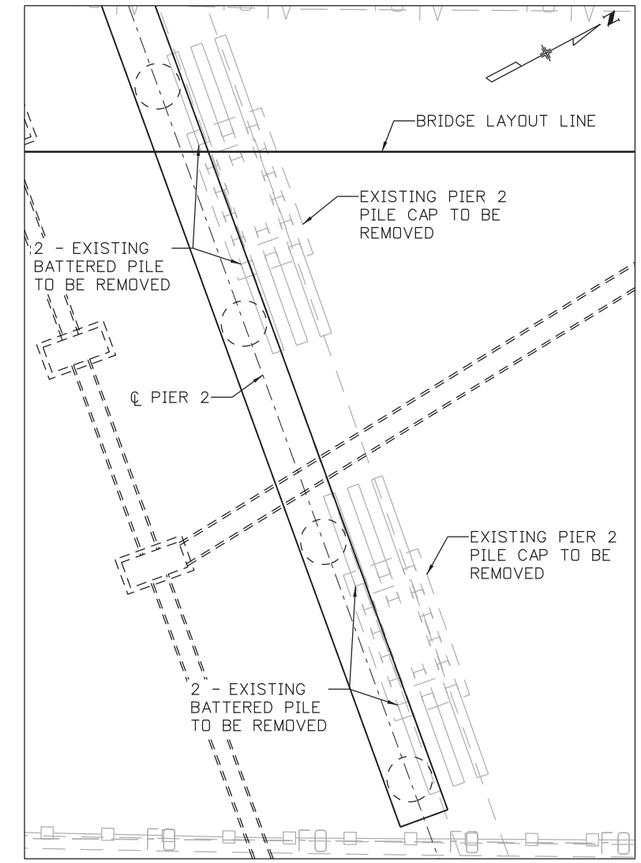

PARTIAL FOUNDATION LAYOUT AT PIER 2

NOTES:

1. LOCATION OF EXISTING FOUNDATIONS SHOWN IS BASED ON EXISTING BRIDGE AS-BUILT PLANS. THE CONTRACTOR IS RESPONSIBLE FOR LOCATING EXISTING FOUNDATIONS AND SHALL NOTIFY THE ENGINEER IF A CONFLICT IS FOUND BETWEEN THE PROPOSED FOUNDATION LAYOUT AND THE EXISTING FOUNDATIONS TO REMAIN IN PLACE.
2. CONTRACTOR IS REPSONSIBLE FOR LOCATION OF EXISTING UTILITIES. SEE UTILITY PLANS FOR ADDITIONAL INFORMATION.
3. H-PILES SHALL BE ORIENTED SUCH THAT WEBS ARE PARALLEL TO ABUTMENT CENTERLINE.
4. THE ENGINEER AND THE GEOTECHNICAL ENGINEER SHALL BE PRESENT DURING THE REMOVAL OF BATTERED PILES.

Design	INITIAL	DATE
Designed By	DRH	2/2019
Checked By	SPD	2/2019

Detail	INITIAL	DATE
Detailed By	KBK	2/2019
Checked By	TLP	2/2019

Quantities	INITIAL	DATE
Quantities By	GMA	2/2019
Checked By	TLP	2/2019

pw:\\PWAPPDMA001:NorthCentral_Omaha\Documents\200020\CDN00999311000000000259892\6.0_CAD_BIM\6.2_Work_In_Progress\NEPA Re-Eval Task\Bridge\Drawings\US85_NEPA_BRDG_FoundationLayout.dgn

DMADDOCK 2:50:20 PM

Print Date: 4/15/2021
File Name: US85_NEPA_BRDG_FoundationLayout.dgn
Horiz. Scale: 1:30 Vert. Scale: As Noted

HDR
1670 BROADWAY, SUITE 3400 DENVER, COLORADO 80202
Phone: 303-764-1520 FAX: 303-860-7139

Sheet Revisions		
Date:	Comments	Init.

DOUGLAS COUNTY
COLORADO
Department of Public Works Phone: 303-660-7490
Engineering Division Fax: 303-660-9550
100 Third Street
Castle Rock, CO 80104

As Constructed
No Revisions:
Revised:
Void:

US 85 OVER C-470
FOUNDATION LAYOUT

Designer: D HOBBS
Detailer: KATHRINEBERG
Sheet Subset: BRIDGE
Structure Numbers: F-16-ICA
Subset Sheets: 9 of 47

Project No./Code
0852-114
23474
Sheet Number 265

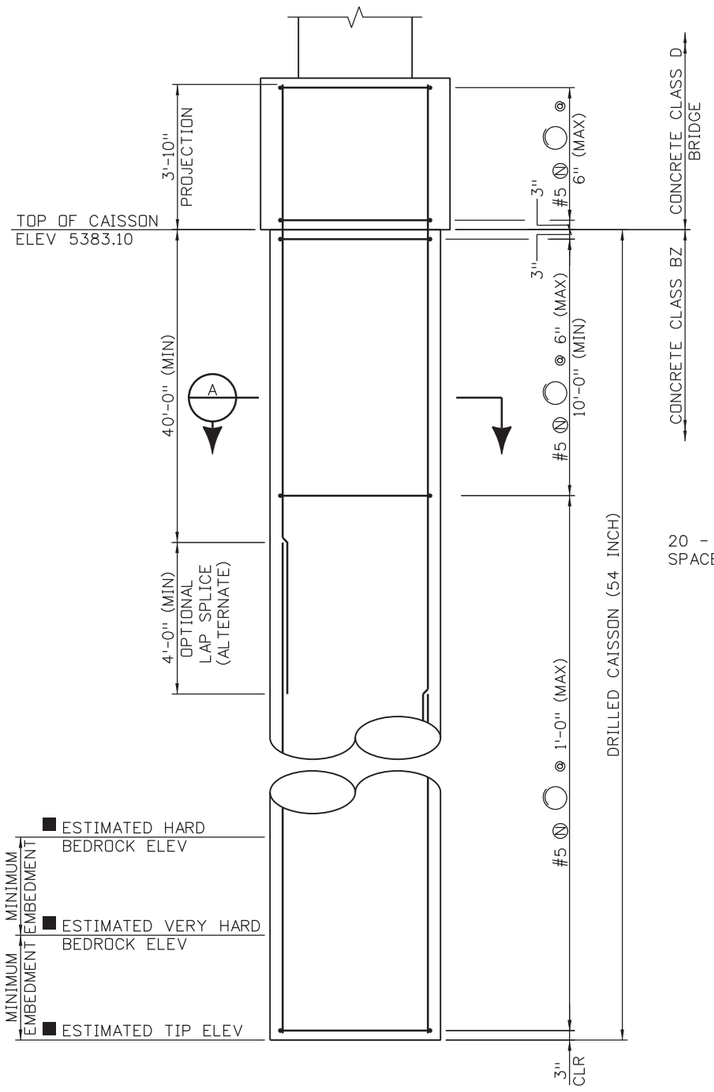

PIER CAISSON ELEVATION

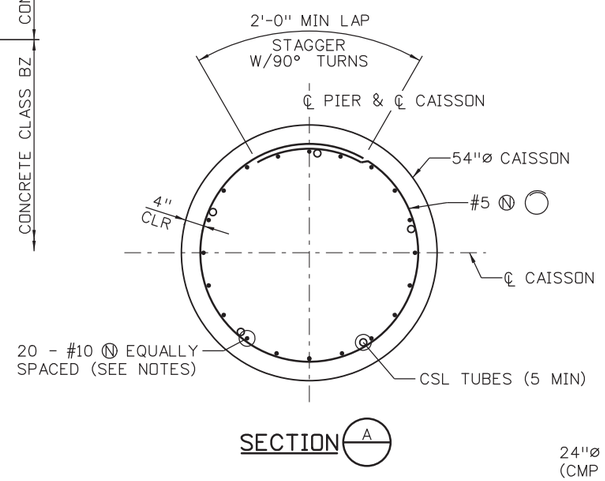

SECTION A

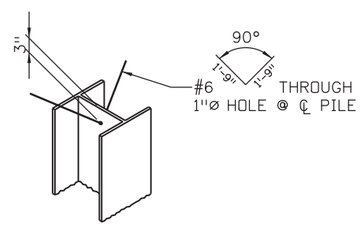

PILE ANCHORAGE DETAIL

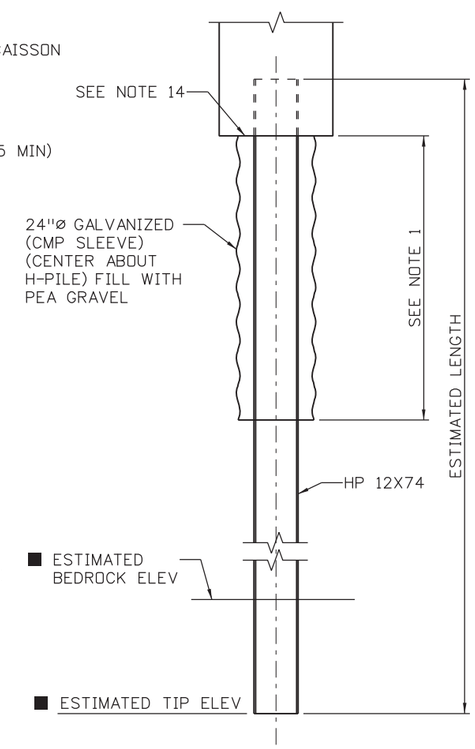

PILING DETAIL

■ SEE TABLE ON FOUNDATION DETAILS (2 OF 2) SHEET.

FOUNDATION DATA TABLE

LOCATION	MAX LOAD (UNFACTORED) (KIPS)	MAX LOAD (FACTORED) (KIPS)
ABUTMENT 1	190	260
PIER 2	1360	1830
ABUTMENT 3	190	260

NOTE: LOADS PROVIDED ARE PER PILE AT ABUTMENTS AND PER CAISSON AT PIER.

NOTES:

1. SEE MSE WALL DETAILS FOR CMP SLEEVE LIMITS.
2. THE USE OF TEMPORARY CASING AND DEWATERING DURING CAISSON CONSTRUCTION MAY BE REQUIRED.
3. BEDROCK ELEVATIONS ARE ESTIMATED FROM THE PROJECT BORING LOGS. ACTUAL ELEVATIONS OF THE BEDROCK MAY DIFFER FROM THOSE SHOWN. A QUALIFIED REPRESENTATIVE OF THE GEOTECHNICAL ENGINEER SHALL BE PRESENT DURING DRILLING OPERATIONS TO DETERMINE THE EXACT ELEVATIONS AT WHICH HARD BEDROCK AND VERY HARD BEDROCK EXISTS.
4. BEDROCK MAY BE VERY HARD AT VARIOUS ELEVATIONS. THE CONTRACTOR SHOULD MOBILIZE EQUIPMENT OF SUFFICIENT SIZE AND OPERATING CONDITIONS TO ACHIEVE THE REQUIRED DESIGN BEDROCK PENETRATION.
5. A QUALIFIED REPRESENTATIVE OF THE GEOTECHNICAL ENGINEER SHALL OBSERVE DRILLED SHAFT INSTALLATION OPERATIONS ON A FULL-TIME BASIS.
6. CAISSONS SHALL EXTEND AT LEAST TO THE ESTIMATED TIP ELEVATION. CAISSONS SHALL BE FURTHER ADVANCED INTO BEDROCK IF NECESSARY TO OBTAIN THE MINIMUM EMBEDMENT INTO BEDROCK SPECIFIED.
7. CSL TESTING SHALL BE PERFORMED ON A MINIMUM OF 4 CAISSONS. AT LEAST ONE CAISSON PER CONSTRUCTION PHASE SHALL BE TESTED.
8. ALL PILING SHALL CONFORM TO THE REQUIREMENTS OF AASHTO M270 GRADE 50 AND SHALL BE PROTECTED WITH A COMMERCIAL GRADE PILE TIP WELDED WITH A FULL PENETRATION GROOVE WELD AROUND ALL SIDES.
9. A QUALIFIED REPRESENTATIVE OF THE GEOTECHNICAL ENGINEER SHALL OBSERVE PILE-DRIVING ACTIVITIES ON A FULL-TIME BASIS. PILES SHALL BE OBSERVED AND CHECKED FOR CRIMPING, BUCKLING, AND ALIGNMENT. A RECORD SHALL BE KEPT OF EMBEDMENT DEPTHS AND PENETRATION RESISTANCES FOR EACH PILE.
10. PILES SHALL BE DRIVEN TO REFUSAL IN THE UNDERLYING BEDROCK AS DEFINED IN STANDARD SPECIFICATIONS SECTION 502.05.
11. THE USE OF A PILE DRIVING ANALYZER (PDA) IS REQUIRED FOR AT LEAST TWO PILES PER ABUTMENT, PER STANDARD SPECIFICATIONS SECTION 502-PILING. THE COST OF PDA MONITORING SHALL BE INCLUDED IN PAY ITEM 502.
12. PILES ARE DESIGNED AS END BEARING PILES.
13. SPLICES IN PILES SHALL BE CJP WELDED SPLICES. ALTERNATE SPLICE DETAILS MAY BE SUBMITTED FOR REVIEW BY THE ENGINEER.
14. COVER TOP OF VOID FORM WITH SHEET METAL OR PLYWOOD PRIOR TO PLACEMENT OF CONCRETE TO PREVENT VOID FORM FROM FILLING WITH CONCRETE.

Design	INITIAL	DATE	Detail	INITIAL	DATE	Quantities	INITIAL	DATE
Designed By	DRH	2/2019	Detailed By	KBK	2/2019	Quantities By	CMA	2/2019
Checked By	SPD	2/2019	Checked By	TLP	2/2019	Checked By	TLP	2/2019

pw:\\PWAPPDMA001:North\Central_Omaha\Documents\200020\CDN0099351\0000000002598922\6.0_CAD_BIM\6.2_Work_In_Progress\NEPA Re-Eval Task\Bridge\Drawings\US85_NEPA_BRDG_FoundationDetails_1.dgn

DMADDOCK 2:50:22 PM

Print Date: 4/15/2021
File Name: US85_NEPA_BRDG_FoundationDetails_1.dgn
Horiz. Scale: 1:1 Vert. Scale: As Noted

HDR
1670 BROADWAY, SUITE 3400 DENVER, COLORADO 80202
Phone: 303-764-1520 FAX: 303-860-7139

Sheet Revisions		
Date:	Comments	Init.

DOUGLAS COUNTY COLORADO
Department of Public Works Phone: 303-660-7490
Engineering Division Fax: 303-660-9550
100 Third Street
Castle Rock, CO 80104

As Constructed
No Revisions:
Revised:
Void:

US 85 OVER C-470
FOUNDATION DETAILS (1 OF 2)

Designer: D HOBBS
Detailer: KATHRINEBERG
Sheet Subset: BRIDGE
Structure Numbers: F-16-ICA
Subset Sheets: 10 of 47

Project No./Code
0852-114
23474
Sheet Number 266

ABUTMENT 1 PILE TIP ELEVATIONS											
PILE	1	2	3	4	5	6	7	8	9	10	11
PILE CUTTOFF ELEV	5405.6	5405.8	5406.0	5406.1	5406.3	5406.5	5406.6	5406.8	5407.0	5407.1	5407.3
ESTIMATED PILE TIP ELEV	5320.0	5320.0	5320.0	5320.0	5320.0	5320.0	5320.0	5320.0	5320.0	5320.0	5320.0
ACTUAL TIP ELEV											
PILE	12	13	14	15	16	17	18	19	20	21	
PILE CUTTOFF ELEV	5407.5	5407.6	5407.8	5408	5408.1	5408.3	5408.5	5408.6	5408.8	5409.00	
ESTIMATED PILE TIP ELEV	5323.0	5326.0	5329.0	5332.0	5335.0	5338.0	5341.0	5344.0	5347.0	5350.0	
ACTUAL TIP ELEV											

ABUTMENT 3 PILE TIP ELEVATIONS											
PILE	22	23	24	25	26	27	28	29	30	31	32
PILE CUTTOFF ELEV	5405.3	5405.5	5405.6	5405.7	5405.8	5406	5406.1	5406.2	5406.4	5406.5	5406.6
ESTIMATED PILE TIP ELEV	5320.0	5321.4	5322.9	5324.3	5325.8	5327.2	5328.7	5330.1	5331.6	5333.0	5333.0
ACTUAL TIP ELEV											
PILE	33	34	35	36	37	38	39	40	41	42	
PILE CUTTOFF ELEV	5406.8	5406.9	5407.00	5407.1	5407.3	5407.4	5407.5	5407.7	5407.8	5407.9	
ESTIMATED PILE TIP ELEV	5333.7	5334.4	5335.1	5335.8	5336.5	5337.2	5337.9	5338.6	5339.3	5340.0	
ACTUAL TIP ELEV											

PIER 2 CAISSON ELEVATIONS								
CAISSON	1	2	3	4	5	6	7	8
ESTIMATED TOP OF HARD BEDROCK ELEV	5331.0	5333.0	5335.0	5337.0	5340.0	5347.0	5353.0	5360.0
REQUIRED DEPTH IN HARD BEDROCK	8.00	9.00	10.00	12.00	11.00	12.00	13.00	14.00
ESTIMATED TOP OF VERY HARD BEDROCK ELEV	5323.0	5324.0	5325.0	5325.0	5329.0	5335.0	5340.0	5346.0
REQURED DEPTH IN VERY HARD BEDROCK	11.40	10.80	10.20	9.00	9.60	9.00	8.40	7.80
ESTIMATED TIP ELEVATION	5311.6	5313.2	5314.8	5316.0	5319.4	5326.0	5331.6	5338.2
ACTUAL TIP ELEV								

NOTES:

1. FOR CAISSON AND PILE NOTES, SEE FOUNDATION DETAILS (1 OF 2).

Design			Detail			Quantities		
	INITIAL	DATE		INITIAL	DATE		INITIAL	DATE
Designed By	DRH	2/2019	Detailed By	KBK	2/2019	Quantities By	GMA	2/2019
Checked By	SPD	2/2019	Checked By	TLP	2/2019	Checked By	TLP	2/2019

pw:\\PWAPPDMA001:NorthCentral_Omaha\Documents\200020\CDN009993\\00000000002598922\6.0_CAD_BIM\6.2_Work_In_Progress\NEPA Re-Eval Task\Bridge\Drawings\US85_NEPA_BRDG_FoundationDetails_2.dgn

DMADDOCK 2:50:23 PM

Print Date: 4/15/2021
File Name: US85_NEPA_BRDG_FoundationDetails_2.dgn
Horiz. Scale: 1:1 Vert. Scale: As Noted

HDR 1670 BROADWAY, SUITE 3400 DENVER, COLORADO 80202
Phone: 303-764-1520 FAX: 303-860-7139

Sheet Revisions		
Date:	Comments	Init.

DOUGLAS COUNTY COLORADO
Department of Public Works Phone: 303-660-7490
Engineering Division Fax: 303-660-9550
100 Third Street
Castle Rock, CO 80104

As Constructed
No Revisions:
Revised:
Void:

US 85 OVER C-470
FOUNDATION DETAILS (2 OF 2)

Designer: D HOBBS
Detailer: KATHRINEBERG
Sheet Subset: BRIDGE
Structure Numbers: F-16-ICA
Subset Sheets: 11 of 47

Project No./Code
0852-114
23474
Sheet Number 267

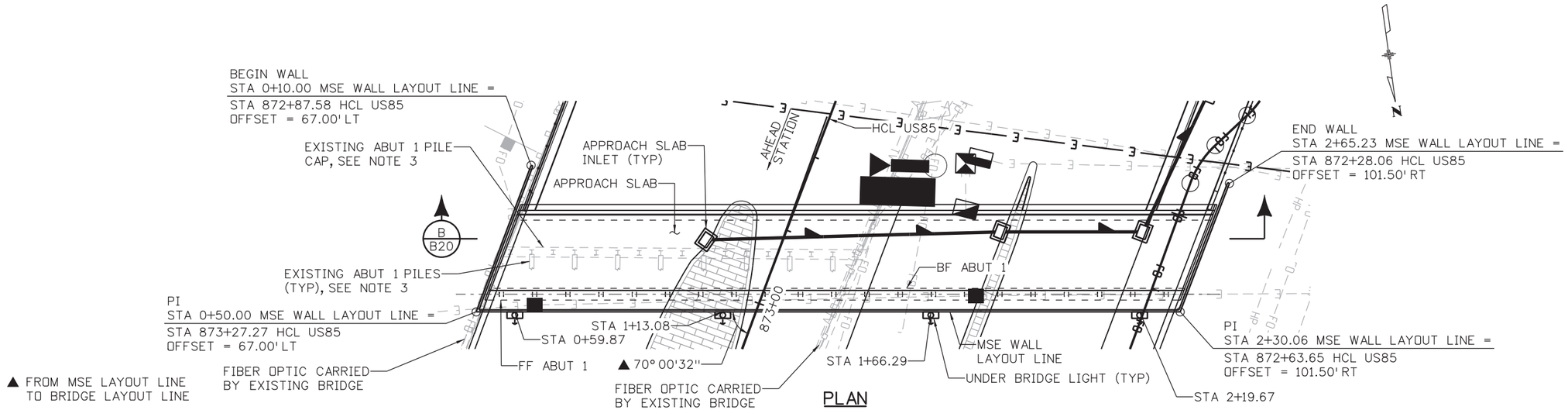

PLAN

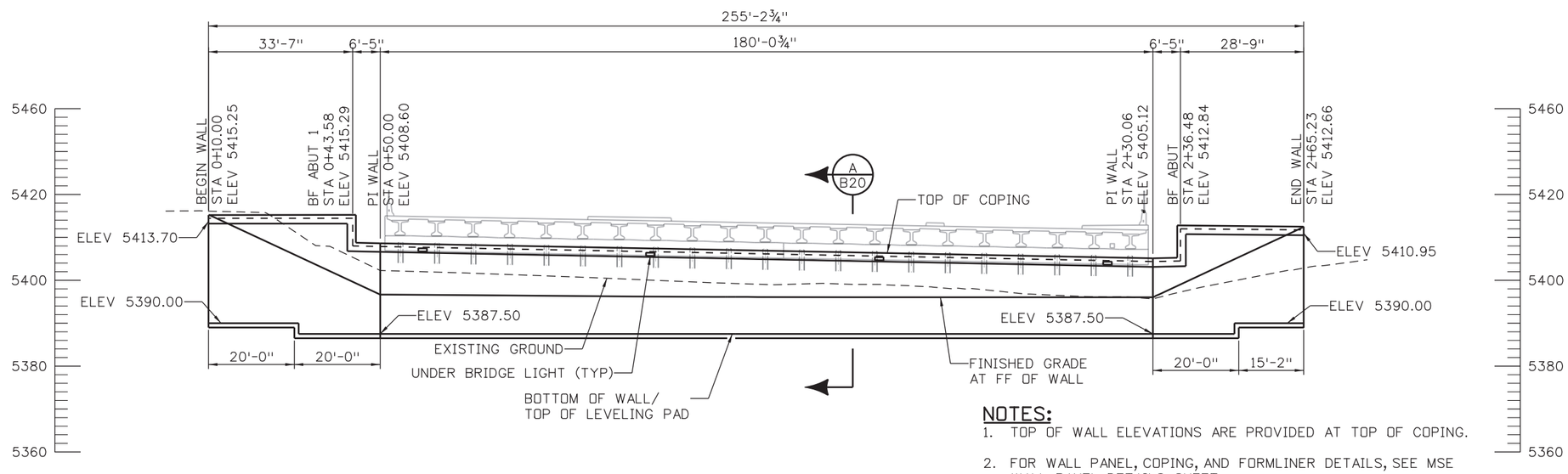

ELEVATION

(TAKEN ALONG MSE WALL LAYOUT LINE)

NOTES:

1. TOP OF WALL ELEVATIONS ARE PROVIDED AT TOP OF COPING.
2. FOR WALL PANEL, COPING, AND FORMLINER DETAILS, SEE MSE WALL PANEL DETAILS SHEET.
3. CONTRACTOR TO REMOVE EXISTING PILE CAP AND EXISTING PILES AS NEEDED TO FACILITATE MSE WALL CONSTRUCTION.
4. FOR ADDITIONAL DETAILS ON DRAINAGE INLETS AND PIPES, SEE DRAINAGE PLANS.

Design	INITIAL	DATE	Detail	INITIAL	DATE	Quantities	INITIAL	DATE
Designed By	DRH	2/2019	Detailed By	KBK	2/2019	Quantities By	CMA	2/2019
Checked By	SPG	2/2019	Checked By	TLP	2/2019	Checked By	TLP	2/2019

pw:\\FWAPPDMA001:NorthCentral_Omaha\Documents\200020\CDN\0999931\000000000259892\6.0_CAD_BIM\6.2_Work_In_Progress\NEPA Re-Eval Task\Bridge\Drawings\US85_NEPA_BRDG_MSE_WALL_PLAN-ELEV_ABUT1.dgn

DMADDOCK 2:50:26 PM

Print Date: 4/15/2021
File Name: US85_NEPA_BRDG_MSE_WALL_PLAN-ELEV_ABUT1.dgn
Horiz. Scale: 1:30 Vert. Scale: As Noted

HDR
1670 BROADWAY, SUITE 3400 DENVER, COLORADO 80202
Phone: 303-764-1520 FAX: 303-860-7139

Sheet Revisions		
Date:	Comments	Init.

DOUGLAS COUNTY COLORADO
Department of Public Works Phone: 303-660-7490
Engineering Division Fax: 303-660-9550
100 Third Street
Castle Rock, CO 80104

As Constructed
No Revisions:
Revised:
Void:

US 85 OVER C-470
MSE WALL PLAN AND ELEVATION AT ABUTMENT 1

Designer: D HOBBS
Detailer: KATHRINEBERG
Structure Numbers: F-16-ICA
Sheet Subset: BRIDGE
Subset Sheets: 12 of 47

Project No./Code
0852-114
23474
Sheet Number 268

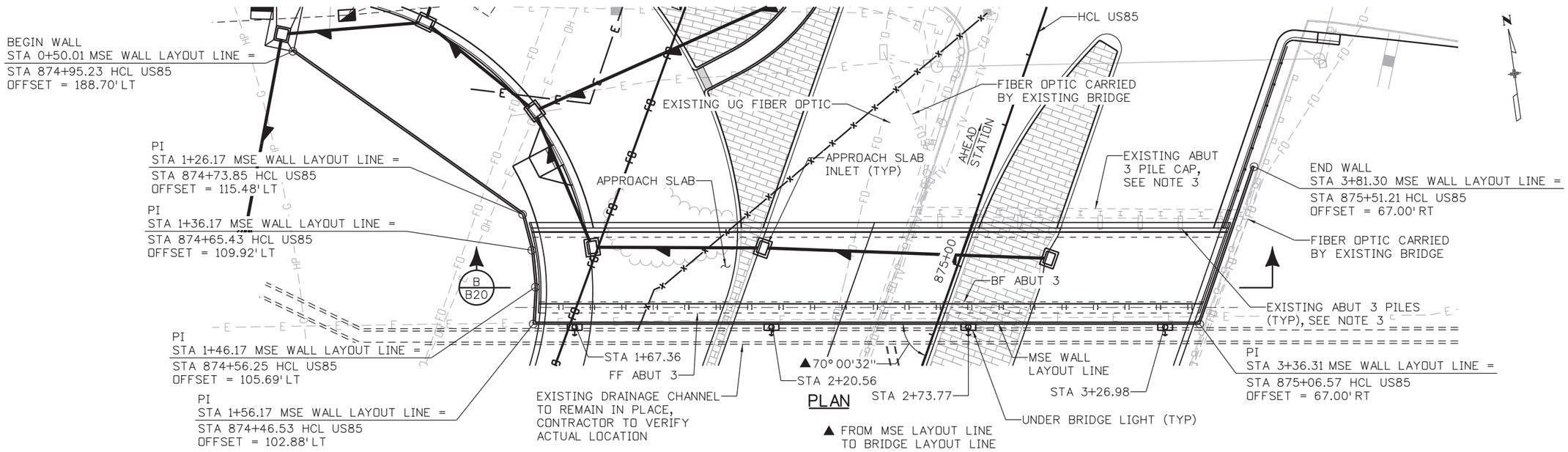

PLAN

▲ FROM MSE LAYOUT LINE TO BRIDGE LAYOUT LINE

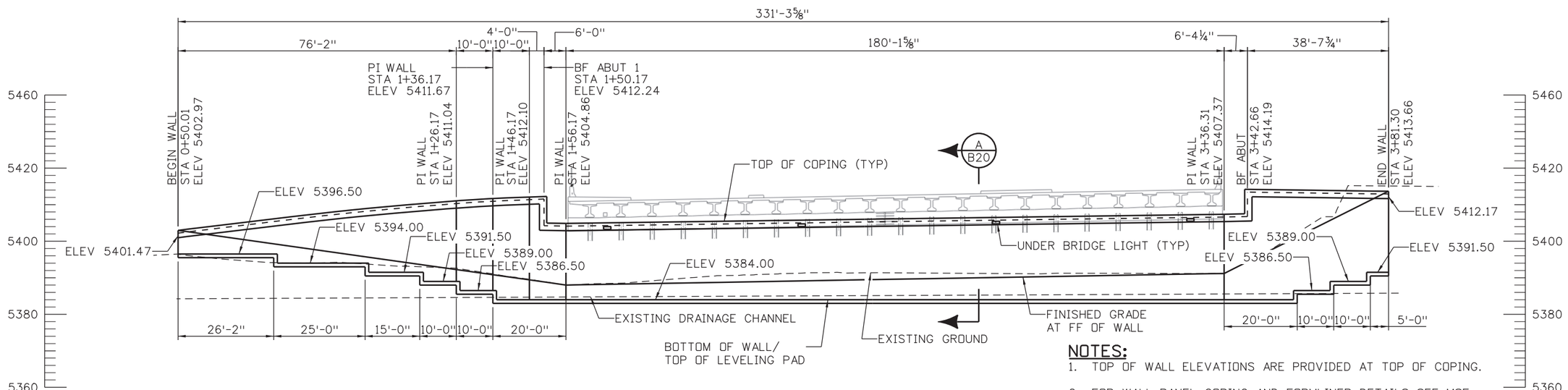

ELEVATION

(TAKEN ALONG MSE WALL LAYOUT LINE)

NOTES:

1. TOP OF WALL ELEVATIONS ARE PROVIDED AT TOP OF COPING.
2. FOR WALL PANEL, COPING, AND FORMLINER DETAILS, SEE MSE WALL PANEL DETAILS SHEET.
3. CONTRACTOR TO REMOVE EXISTING PILE CAP AND EXISTING PILES AS NEEDED TO FACILITATE MSE WALL CONSTRUCTION.
4. FOR ADDITIONAL DETAILS ON DRAINAGE INLETS AND PIPES, SEE DRAINAGE PLANS.

Design	INITIAL	DATE	Detail	INITIAL	DATE	Quantities	INITIAL	DATE
Designed By	DRH	2/2019	Detailed By	KBK	2/2019	Quantities By	CMA	2/2019
Checked By	SPD	2/2019	Checked By	TLP	2/2019	Checked By	TLP	2/2019

pw:\\PWAPPDMA001:North_Central_Omaha\Documents\200020\CDN003993\000000000259892\6.0_CAD_BIM\6.2_Work_In_Progress\NEPA Re-Eval Task\Bridge\Drawings\US85_NEPA_BRDG_MSE_WALL_PLAN-ELEV_ABUT3.dgn

DMADDOCK 2:50:30 PM

Print Date: 4/15/2021
File Name: US85_NEPA_BRDG_MSE_WALL_PLAN-ELEV_ABUT3.dgn
Horiz. Scale: 1:30 Vert. Scale: As Noted

HDR
1670 BROADWAY, SUITE 3400 DENVER, COLORADO 80202
Phone: 303-764-1520 FAX: 303-860-7139

Sheet Revisions		
Date:	Comments	Init.

DOUGLAS COUNTY COLORADO
Department of Public Works Phone: 303-660-7490
Engineering Division Fax: 303-660-9550
100 Third Street
Castle Rock, CO 80104

As Constructed
No Revisions:
Revised:
Void:

US 85 OVER C-470
MSE WALL PLAN AND ELEVATION AT ABUTMENT 3

Designer: D HOBBS
Detailer: KATHRINEBERG
Sheet Subset: BRIDGE
Structure Numbers: F-16-ICA
Subset Sheets: 13 of 47

Project No./Code
0852-114
23474
Sheet Number 269

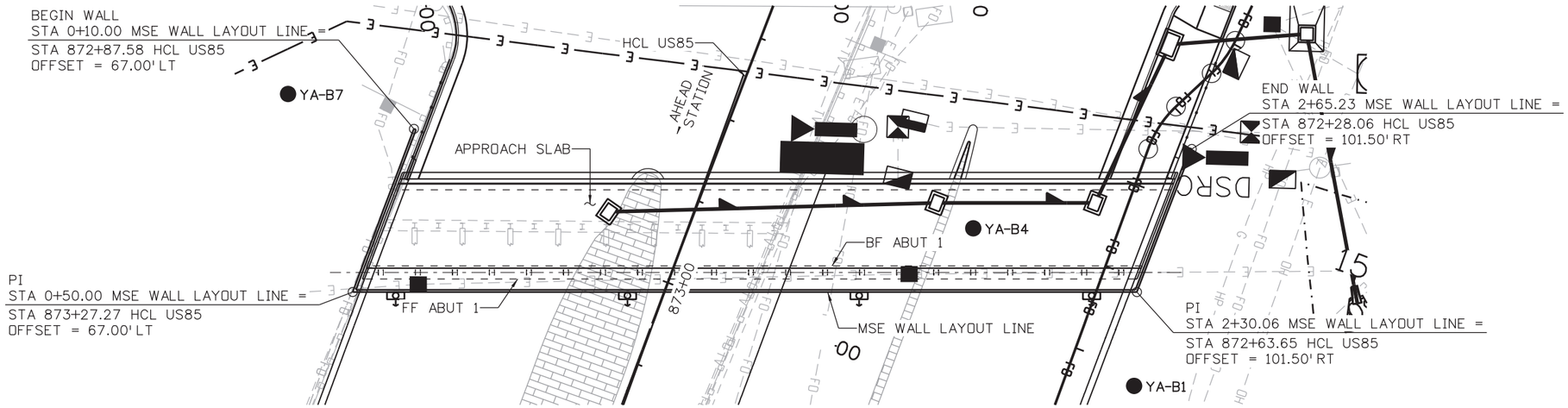

PLAN

● BORING LOCATION

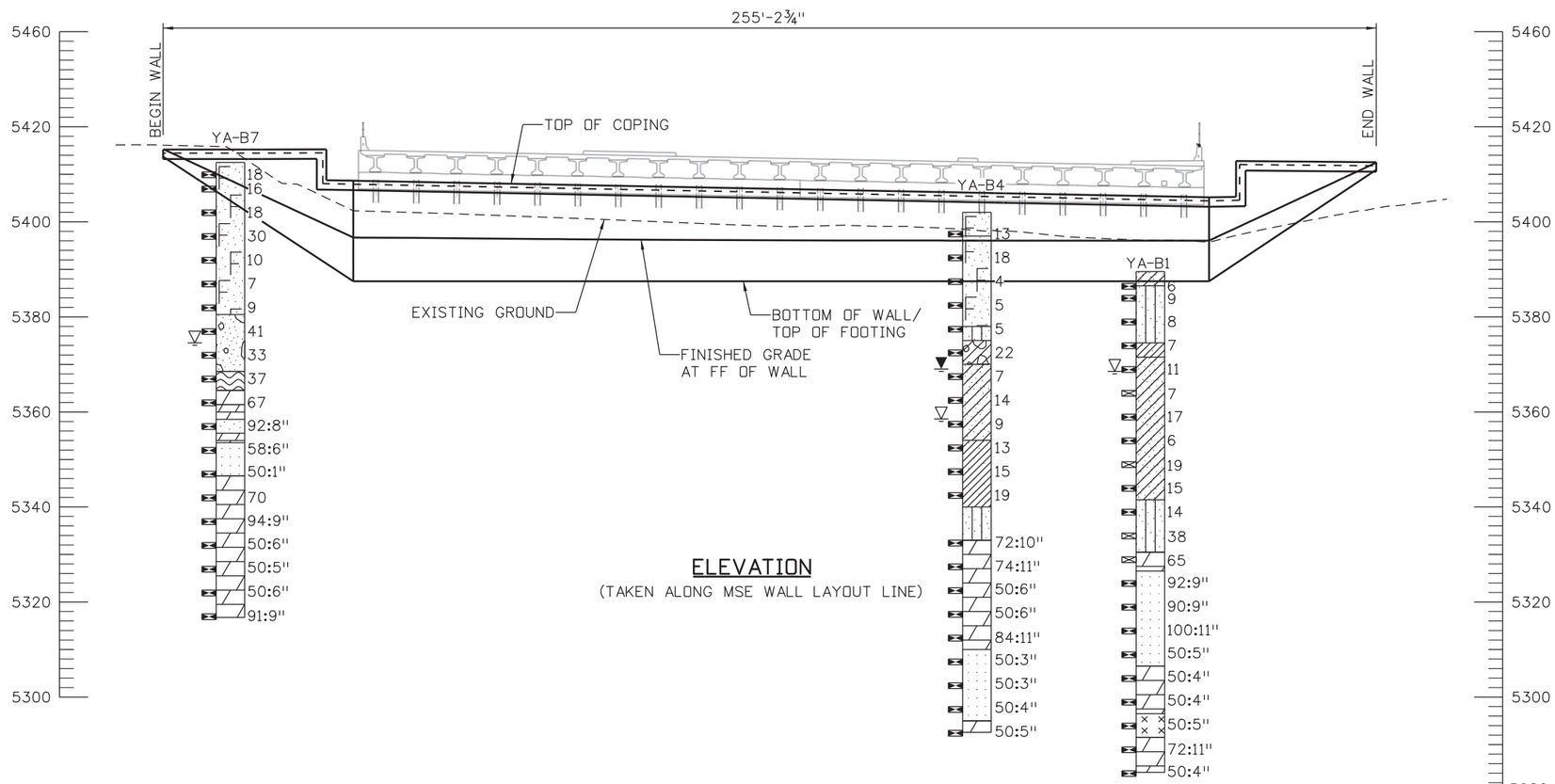

ELEVATION

(TAKEN ALONG MSE WALL LAYOUT LINE)

LEGEND

- USCS Clayey Sand
- USCS Silty Sand
- USCS Low Plasticity Sandy Clay
- Fill with Sand as major soil
- USCS Poorly-graded Gravelly Sand
- USCS Poorly-graded Sandy Gravel
- USCS Clayey Gravel
- Fill with Clay as major soil
- Interbedded claystone and sandstone
- Claystone
- Sandstone
- Siltstone
- Weathered Bedrock

TYPICAL BOREHOLE LOG

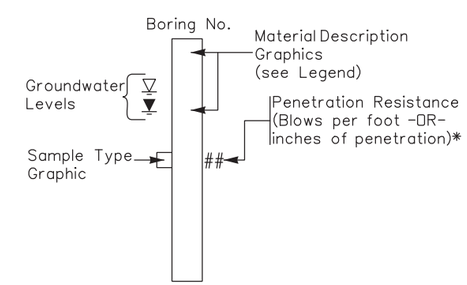

*e.g. A value of 50/3 or 50:3" indicates that 50 blows were applied to the sampler, with a penetration of 3 inches.

Design			Detail			Quantities		
Designed By	INITIAL	DATE	Detailed By	INITIAL	DATE	Quantities By	INITIAL	DATE
Checked By			Checked By			Checked By		

pw:\\PWAPPDMA001:NorthCentral_Omaha\Documents\200020\CDN0099931\0000000002259892\6.0_CAD_BIM\6.2_Work_In_Progress\NEPA Re-Eval Task\Materials_Geotechnical\Drawings\US85_NEPA_BRDG_MSE_WALL_EG_ABUT1.dgn

DMADDOCK 2:50:33 PM

Print Date: 4/15/2021
File Name: US85_NEPA_BRDG_MSE_WALL_EG_ABUT1.dgn
Horiz. Scale: 1:30 Vert. Scale: As Noted

Yeh and Associates, Inc.
Consulting Engineers & Scientists

Sheet Revisions		
Date:	Comments	Init.

DOUGLAS COUNTY
COLORADO

Department of Public Works
Engineering Division
100 Third Street
Castle Rock, CO 80104
Phone: 303-660-7490
Fax: 303-660-9550

As Constructed
No Revisions:
Revised:
Void:

US 85
MSE WALL ENGINEERING GEOLOGY
AT ABUTMENT 1

Designer: HCL
Detailer: MJW
Structure Numbers
Sheet Subset: BRIDGE
Subset Sheets: 14 of 47

Project No./Code
0852-114
23474
Sheet Number 270

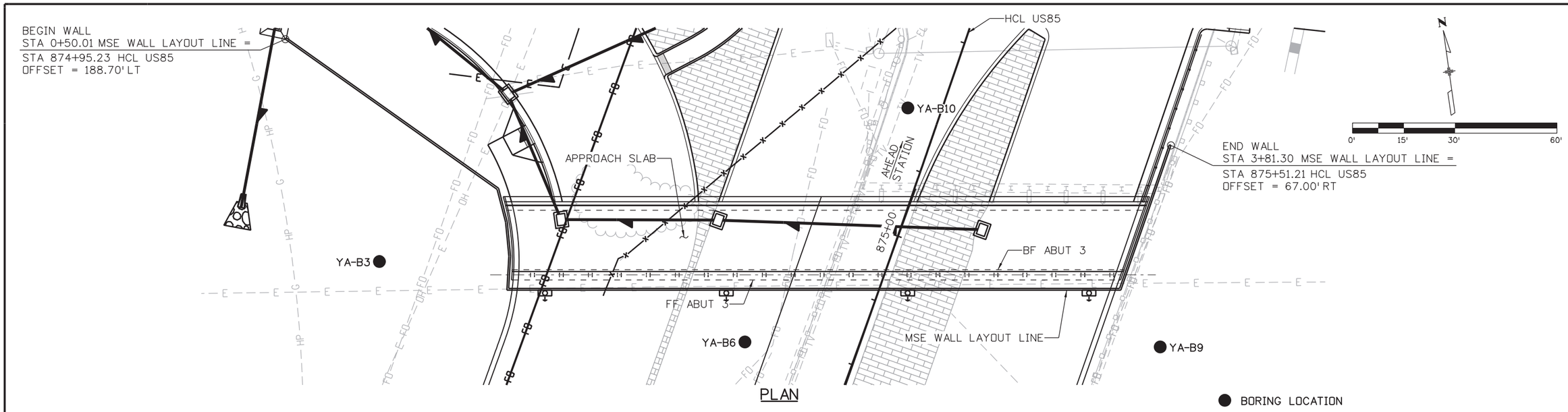

PLAN

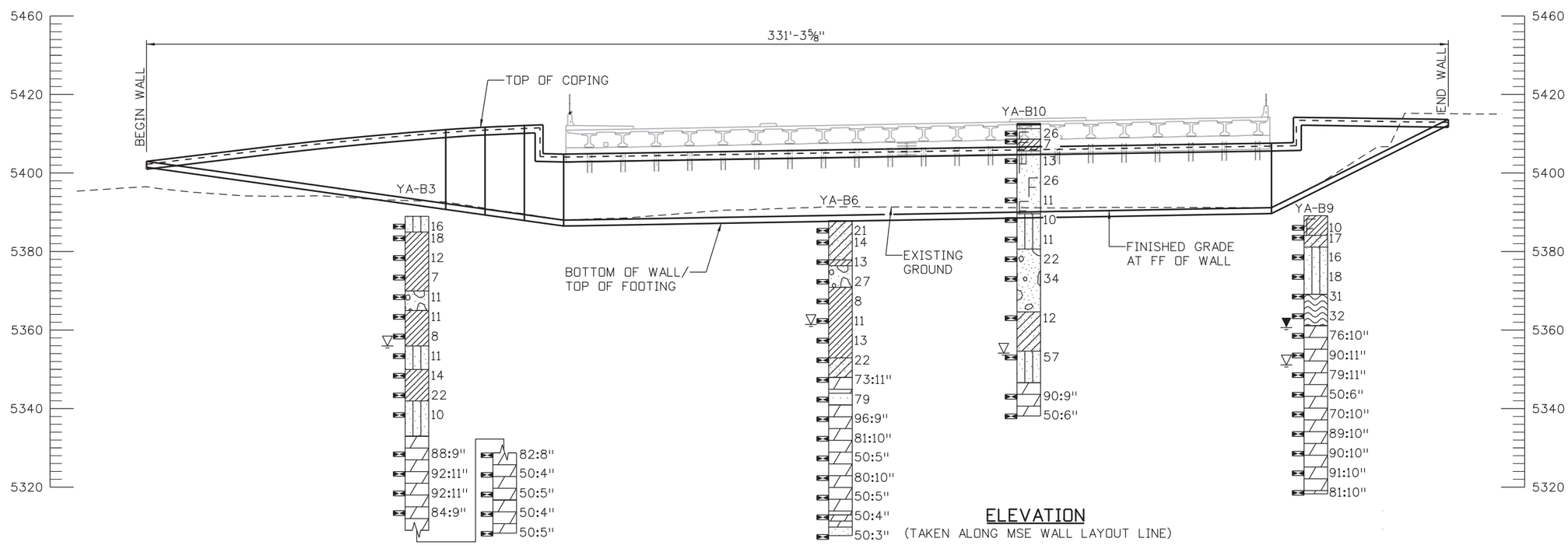

ELEVATION
(TAKEN ALONG MSE WALL LAYOUT LINE)

Quantities			
Quantities By	INITIAL	Checked By	DATE

Detail			
Detailed By	INITIAL	Checked By	DATE

Design			
Designed By	INITIAL	Checked By	DATE

pw:\\PWAPPDMA001:North\Central_Omaha\Documents\Z000020\CDN0099931\0000000002598922\6.0_CAD_BIM\6.2_Work_In_Progress\NEPA Re-Eval Task\Materials_Geotechnical\Drawings\US85_NEPA_BRDG_MSE_WALL_EG_ABUT3.dgn

DMADDOCK 2:50:36 PM

Print Date: 4/15/2021
File Name: US85_NEPA_BRDG_MSE_WALL_EG_ABUT3.dgn
Horiz. Scale: 1:30 Vert. Scale: As Noted

Yeh and Associates, Inc.
Consulting Engineers & Scientists

Sheet Revisions		
Date:	Comments	Init.

DOUGLAS COUNTY
COLORADO

Department of Public Works
Engineering Division
100 Third Street
Castle Rock, CO 80104
Phone: 303-660-7490
Fax: 303-660-9550

As Constructed
No Revisions:
Revised:
Void:

US 85
MSE WALL ENGINEERING GEOLOGY
AT ABUTMENT 3

Designer: HCL
Detailer: MJW
Sheet Subset: BRIDGE
Structure Numbers
Subset Sheets: 15 of 47

Project No./Code
0852-114
23474
Sheet Number 271

1.0 MSE WALL MATERIALS

1.1 Compacted structural backfill shall meet the gradation for structural backfill per project specifications

1.2 CDOT Class 1 Structure Backfill
ø = 34°
Unit Weight of Soil = 135 PCF

1.3 Concrete:
Concrete Class D (Leveling Pad): f'c = 4500 PSI
Unit Weight of Concrete=150 PCF

2.0 MSE WALL CONSTRUCTION SEQUENCE

2.1 The foundation soils shall be cleaned of all deleterious materials (organic, boulders, etc.) and if necessary, removed and replaced with imported backfill meeting the above gradation requirements to full depth of removal and compacted to at least 95% of maximum dry density as determined by the modified Proctor (AASHTO T-180) at optimum moisture content ±2%.

2.2 Hand operated compaction equipment should be used for compaction of backfill within 3 feet of the back face of the MSE panels.

2.3 Reinforcement zone and retained zone backfill shall be benched into natural material behind excavation line and compacted to at least 95% of maximum dry density as determined by the modified Proctor (AASHTO T-180) at optimum moisture content 2%.

2.4 Install the Drain Pipes as shown on the drawings.

2.5 Place reinforcements as shown on the drawings. Apply nominal tension to reinforcement so no wrinkles are formed before receiving the next soil lift.

2.6 Reinforcement lengths as shown on the drawings are measured from the back face of the wall.

2.7 Track vehicles shall not be operated directly on the reinforcements. A minimum of 6 inches of backfill is required to operate track vehicles over reinforcements and turning shall be minimized to avoid displacing the reinforcement. Rubber-tired vehicles may drive slowly directly on the reinforcements if necessary.

2.8 Permanent and temporary surface and irrigation water diversion is the responsibility of the Contractor. The backfill soils should not be allowed to saturate.

2.9 The Contractor shall modify facing as needed to fit pipe penetrations through wall. Install geotextile behind gaps to retain backfill soil.

3.0 MSE WALL DESIGN CRITERIA

3.1 MSE wall geotechnical recommendations are presented in the Yeh and Associates Geotechnical Engineering Report.

3.2 AASHTO LRFD Bridge Specifications, 8th Edition 2017.

3.3 The final grading in the back and in front of wall shall not be steeper than 2 horizontal to 1 vertical (2H:1V). Any unsuitable foundation material below the reinforced soil mass shall be stripped and replaced with engineered materials.

3.4 Based on the Geotechnical Engineering report, the external and global stability of the foundation of the wall and the identified reinforcement length requirements were checked and deemed to meet or exceed project requirements.

3.5 Meet no hydrostatic pressure assumption with CDOT Class 1 Structure Backfill and associated drainage details.

4.0 GENERAL REQUIREMENTS AND NOTES

4.1 The Contractor is responsible for maintaining the stability of the structure, excavation, and slope during excavation and MSE wall construction per contract specifications.

4.2 The Contractor is responsible for field locating all nearby utilities, constructing and maintaining a safe temporary slope, and temporary excavation support if needed. Conflicting utilities may require field adjustment by the Engineer.

4.3 Soil reinforcement may be cut to accommodate pipe installation.

4.4 The top of leveling pad elevations shown for MSE walls are the highest allowable elevations. In no case shall the top of the leveling pad be less than 1'-6" from finished grade at the front face.

4.5 The Contractor shall verify all dependent dimensions in the field before ordering or fabricating any material.

4.6 The information shown on these plans concerning the type and location of underground utilities is not guaranteed to be accurate or all inclusive. The Contractor is responsible for making his own determination as to the type and location of underground utilities as may be necessary to avoid damage thereto.

4.7 Shop drawings for wall layout and design shall address penetrating reinforcement.

4.8 If manholes, piles, or drop inlets are present, they shall be detailed in the shop drawings.

4.9 If piles are located within the reinforced earth volume, they shall be driven prior to construction of MSE wall unless a method to protect the structure, which is acceptable to the Engineer, is proposed and approved in writing by the Engineer.

4.10 Contractor shall coordinate if existing or future structures, pipes, foundations or guardrail posts which are within the reinforced earth volume interfere with the normal placement of reinforcement and specific direction has not been provided on the plans, the Contractor shall notify the Engineer to determine what course of action should be taken.

4.11 The Wall Contractor is responsible for gradually deflecting upper reinforcing and geomembrane downward to avoid conflicts with paving and subgrade preparation.

4.12 The Contractor is responsible for controlling storm water drainage in the vicinity of the wall during construction. Storm water runoff is to be controlled and discharged away from the wall and reinforced backfill for conforming dry condition.

4.13 The Contractor shall make an independent review and analysis of all handling, loading, lifting and erection. The Contractor shall devise and execute project specific procedures for handling, loading and lifting which comply with all federal, state and local safety laws, regulations and requirement and all applicable contract requirements.

Design				Detail				Quantities			
	INITIAL	DATE			INITIAL	DATE			INITIAL	DATE
Designed By	DRH	2/2019	Detailed By		KBK	2/2019	Quantities By		CMA	2/2019
Checked By	SPD		Checked By				Checked By			

pw:\\PWAPPDMA001:NorthCentral_Omaha\Documents\200020\CDN0099931\0000000002598 92\6.0_CAD_BIM\6.2_Work_In_Progress\NEPA Re-Eval Task\Bridge\Drawings\US85_NEPA_BRDG_MSE_WALL_GEOTECH_DETAILS1_YEH.DGN

DMADDOCK 2:50:38 PM

Print Date: 4/15/2021
File Name: US85_NEPA_BRDG_MSE_WALL_GEOTECH_DETAILS1_YEH.DGN
Horiz. Scale: 1:1 Vert. Scale: As Noted

Yeh and Associates, Inc.
Consulting Engineers & Scientists

Sheet Revisions		
Date:	Comments	Init.

DOUGLAS COUNTY
COLORADO

Department of Public Works
Engineering Division
100 Third Street
Castle Rock, CO 80104
Phone: 303-660-7490
Fax: 303-660-9550

As Constructed
No Revisions:
Revised:
Void:

US 85 OVER C-470
MSE WALL GEOTECHNICIAL DETAILS
(1 OF 3)

Designer:	HCL	Structure Numbers	F-16-ICA
Detailer:	MJW		
Sheet Subset:	BRIDGE	Subset Sheets:	16 of 47

Project No./Code
0852-114
23474
Sheet Number 272

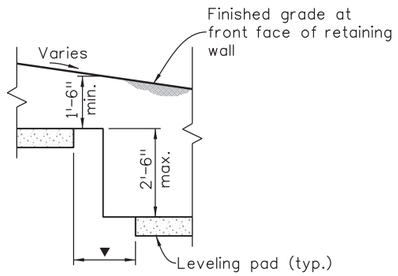

LEVELING PAD STEP DETAIL

▼ Dimension dependent on wall manufacturer

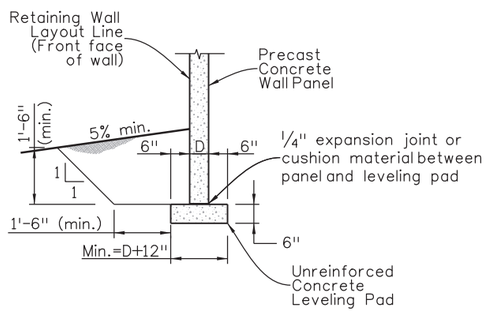

LEVELING PAD DETAIL

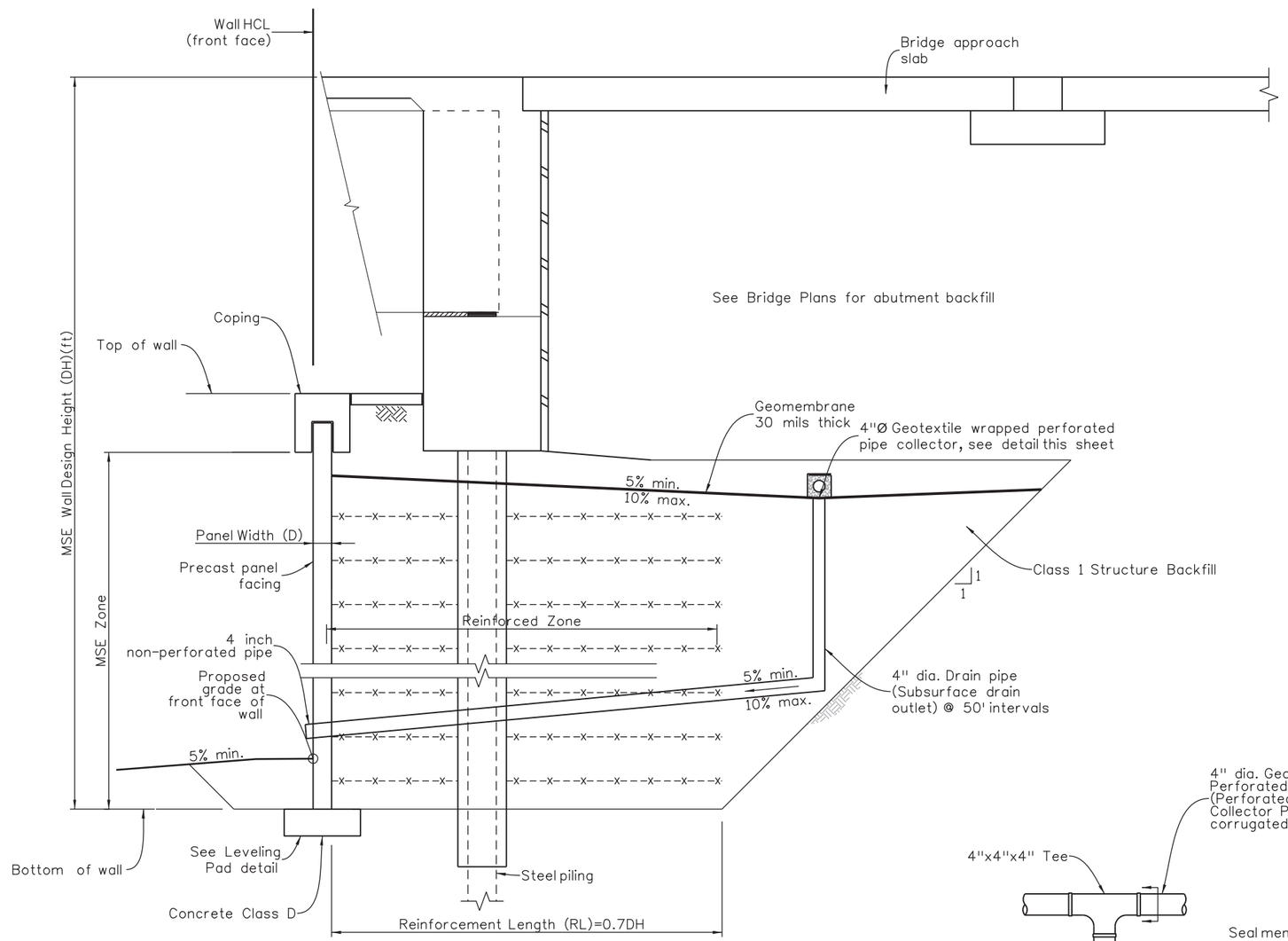

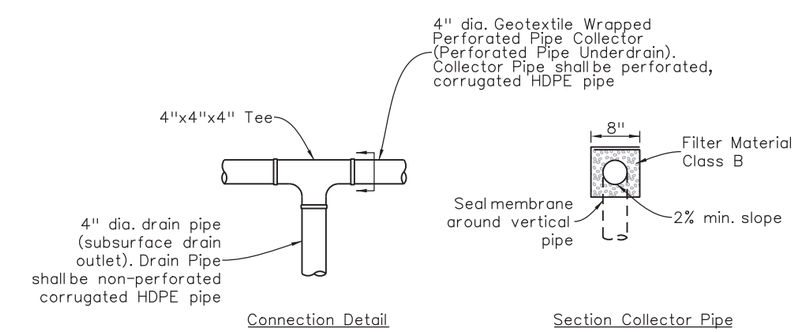

Connection Detail

Section Collector Pipe

COLLECTOR PIPE/ DRAIN PIPE DETAIL

Design				Detail				Quantities			
	INITIAL	DATE			INITIAL	DATE			INITIAL	DATE
Designed By	DRH	2/2019	Detailed By	KBK	2/2019	Quantities By	CMA	2/2019
Checked By	SPD	2/2019	Checked By	TLP	2/2019	Checked By	TLP	2/2019

pw:\\PWAPPDMA001:NorthCentral_Omaha\Documents\200020\CDN0099931\000000000259892\6.0_CAD_BIM\6.2_Work_In_Progress\NEPA Re-Eval Task\Bridge\Drawings\US85_NEPA_BRDG_MSE_WALL_GEOTECH_DETAILS2_YEH.DGN

DMADDOCK 2:50:40 PM

Print Date: 4/15/2021
File Name: US85_NEPA_BRDG_MSE_WALL_GEOTECH_DETAILS2_YEH.DGN
Horiz. Scale: 1:1 Vert. Scale: As Noted

Yeh and Associates, Inc.
Consulting Engineers & Scientists

Sheet Revisions		
Date:	Comments	Init.

DOUGLAS COUNTY COLORADO
Department of Public Works
Engineering Division
100 Third Street
Castle Rock, CO 80104
Phone: 303-660-7490
Fax: 303-660-9550

As Constructed
No Revisions:
Revised:
Void:

US 85 OVER C-470
MSE WALL GEOTECHNICIAL DETAILS
(2 OF 3)

Designer:	HCL	Structure Numbers	F-16-ICA
Detailer:	MJW		
Sheet Subset:	BRIDGE	Subset Sheets:	17 of 47

Project No./Code
0852-114
23474
Sheet Number 273

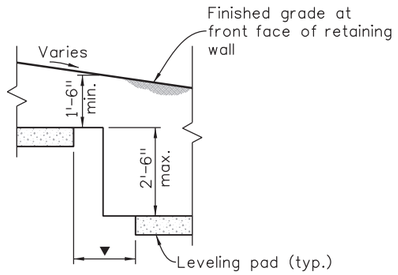

LEVELING PAD STEP DETAIL

▼ Dimension dependent on wall manufacturer

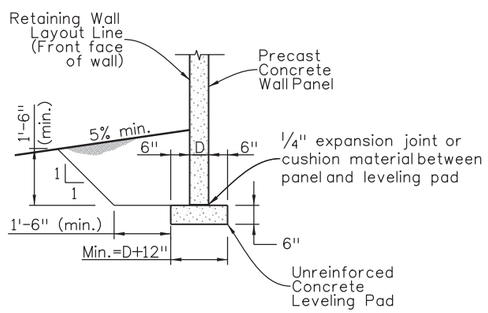

LEVELING PAD DETAIL

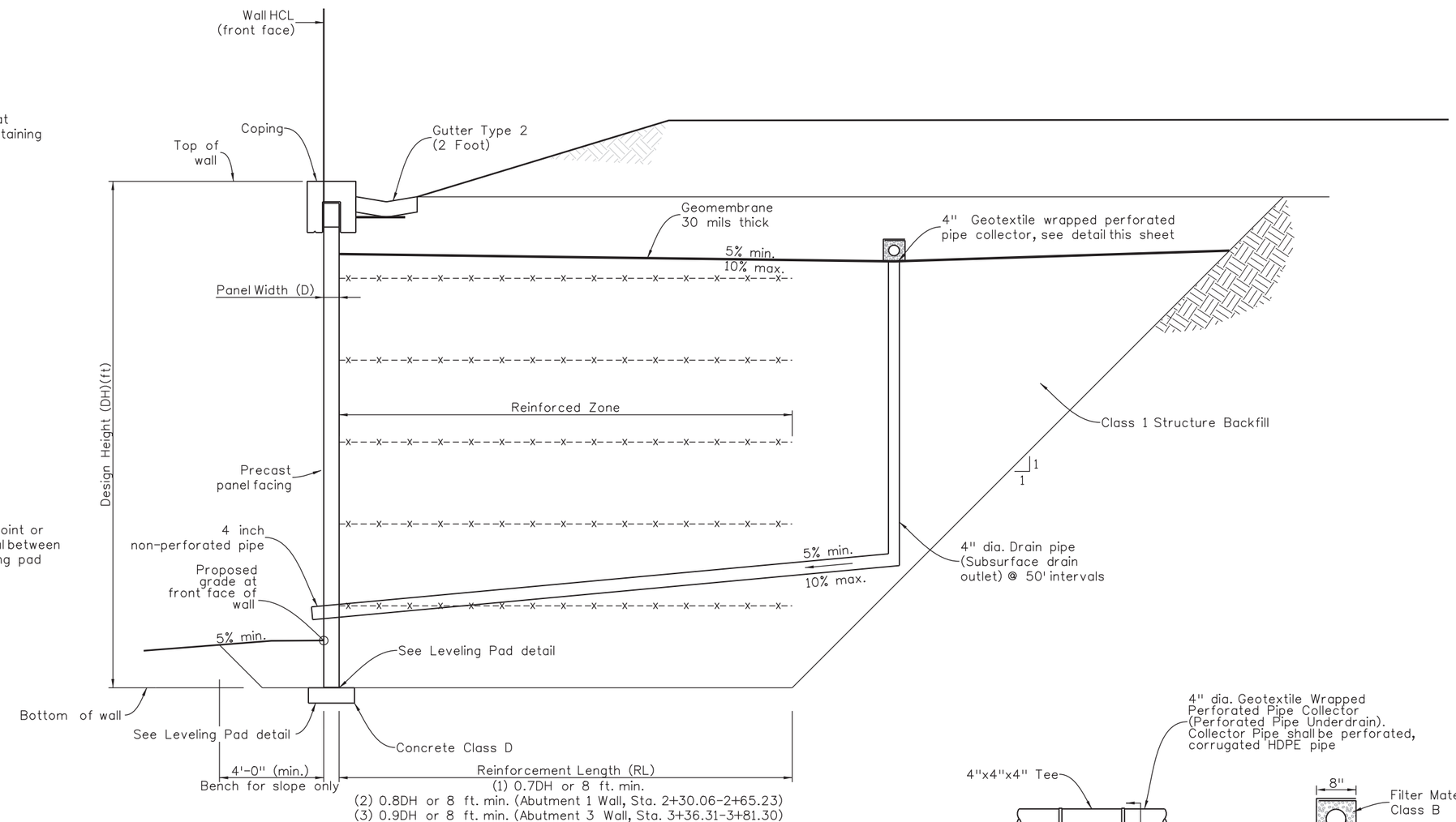

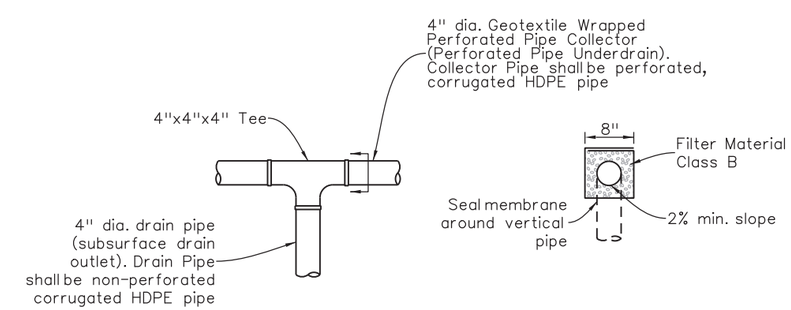

Connection Detail

Section Collector Pipe

COLLECTOR PIPE/ DRAIN PIPE DETAIL

Quantities			
	INITIAL	DATE	
Quantities By	CMA	2/2019	
Checked By	TLP	2/2019	

Detail			
	INITIAL	DATE	
Detailed By	KBK	2/2019	
Checked By	TLP	2/2019	

Design			
	INITIAL	DATE	
Designed By	DRH	2/2019	
Checked By	SPD	2/2019	

pw:\\PWAPPDMA001:NorthCentral_Omaha\Documents\200020\CDN0099931\0000000002259892\6.0_CAD_BIM\6.2_Work_In_Progress\NEPA Re-Eval Task\Bridge\Drawings\US85_NEPA_BRDG_MSE_WALL_GEOTECH_DETAILS3_YEH.DGN

DMADDOCK 2:50:42 PM

Print Date: 4/15/2021
File Name: US85_NEPA_BRDG_MSE_WALL_GEOTECH_DETAILS3_YEH.DGN
Horiz. Scale: 1:1 Vert. Scale: As Noted

Yeh and Associates, Inc.
Consulting Engineers & Scientists

Sheet Revisions		
Date:	Comments	Init.

DOUGLAS COUNTY COLORADO
Department of Public Works
Engineering Division
100 Third Street
Castle Rock, CO 80104
Phone: 303-660-7490
Fax: 303-660-9550

As Constructed
No Revisions:
Revised:
Void:

US 85 OVER C-470
MSE WALL GEOTECHNICIAL DETAILS
(3 OF 3)

Designer:	HCL	Structure Numbers	F-16-ICA
Detailer:	MJW		
Sheet Subset:	BRIDGE	Subset Sheets:	18 of 47

Project No./Code
0852-114
23474
Sheet Number 274

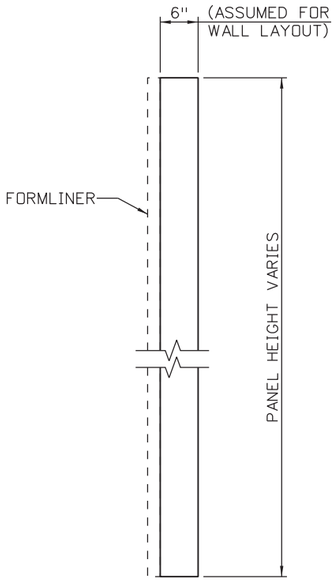

PRECAST PANEL DETAIL

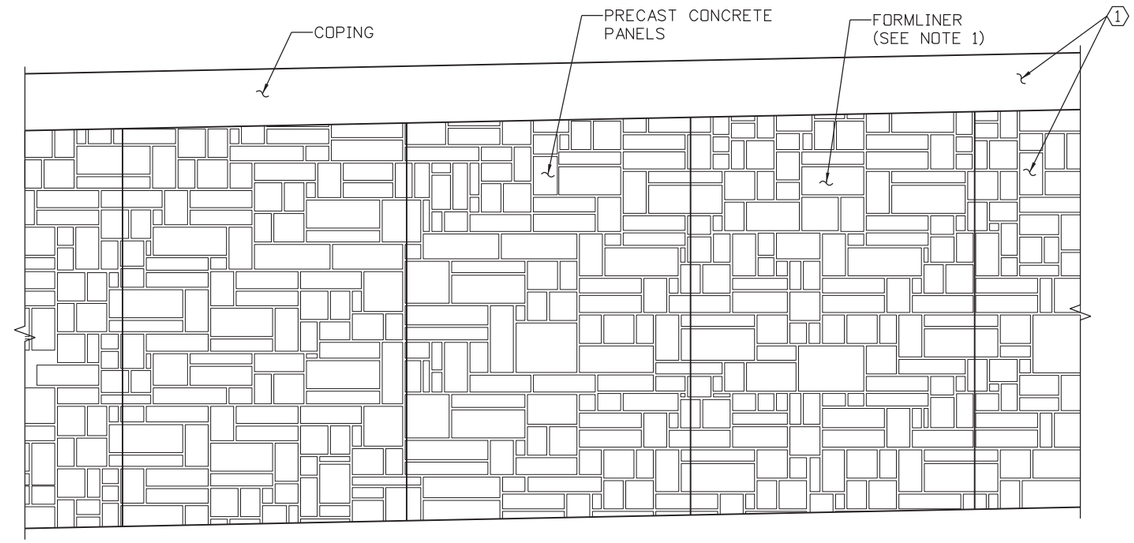

MSE WALL PANEL - ELEVATION

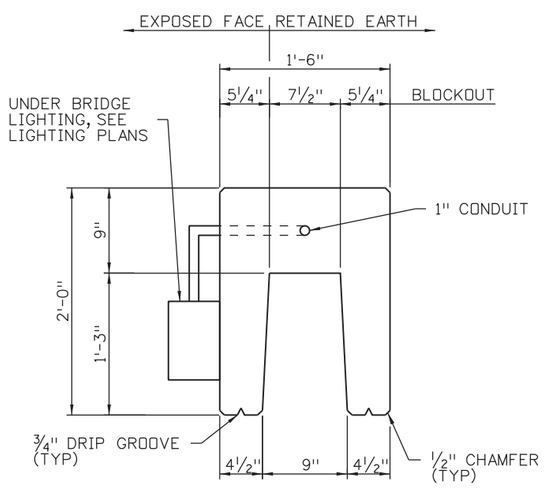

DIMENSIONS ABOVE ASSUMED FOR WALL LAYOUT DESIGN

CAST-IN-PLACE COPING DETAIL

NOTES:

1. FORMLINER SHALL BE SCOTT SYSTEM #167C ASLAR STONE C WITH 1¼" RELIEF OR EQUIVALENT.
2. PRECAST MSE PANELS AND CAST-IN-PLACE COPING ARE DESIGNED BY THE CONTRACTOR.

KEYNOTES:

1 LIMITS OF STRUCTURAL CONCRETE COATING - SAND, FEDERAL COLOR NO. 31667. EXTEND STRUCTURAL CONCRETE COATING 1'-0" BELOW FINISHED GRADE.

Design			Detail			Quantities		
	INITIAL	DATE		INITIAL	DATE		INITIAL	DATE
Designed By	DRH	2/2019	Detailed By	KBK	2/2019	Quantities By	CMA	2/2019
Checked By	SPG	2/2019	Checked By	TLP	2/2019	Checked By	TLP	2/2019

pw:\\PWAPPDMA001:NorthCentral_Omaha\Documents\200020\CDN0099931\00000000025989\2\6.0_CAD_BIM\6.2_Work_In_Progress\NEPA Re-Eval Task\Bridge\Drawings\US85_NEPA_BRDG_MSE_WallPanelDetails.dgn

DMADDOCK 2:50:44 PM

Print Date: 4/15/2021
File Name: US85_NEPA_BRDG_MSE_WallPanelDetails.dgn
Horiz. Scale: 1:1 Vert. Scale: As Noted

HDR 1670 BROADWAY, SUITE 3400 DENVER, COLORADO 80202
Phone: 303-764-1520 FAX: 303-860-7139

Sheet Revisions		
Date:	Comments	Init.

DOUGLAS COUNTY COLORADO
Department of Public Works Phone: 303-660-7490
Engineering Division Fax: 303-660-9550
100 Third Street
Castle Rock, CO 80104

As Constructed
No Revisions:
Revised:
Void:

US 85 OVER C-470
MSE WALL PANEL DETAILS

Designer: D HOBBS
Detailer: KATHRINEBERG
Sheet Subset: BRIDGE
Structure Numbers: F-16-ICA
Subset Sheets: 19 of 47

Project No./Code
0852-114
23474
Sheet Number 275

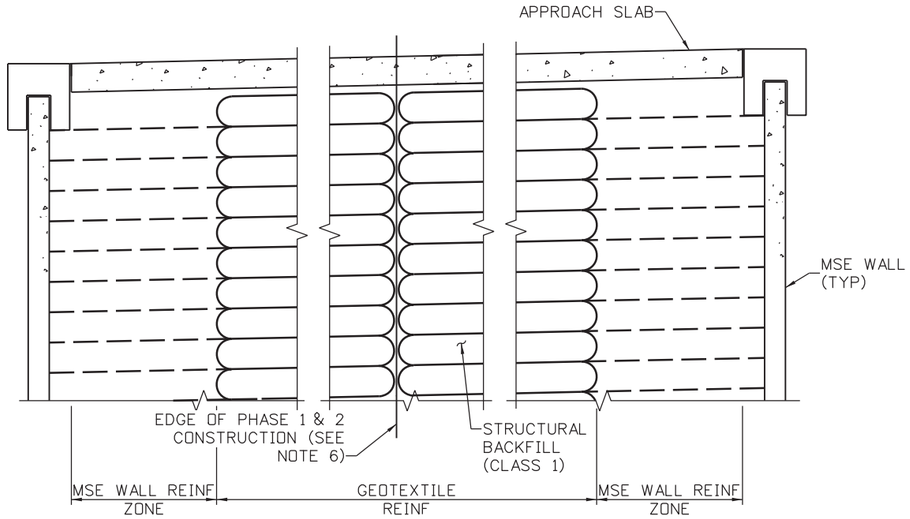

SECTION B/B12 B/B13
BRIDGE RAIL NOT SHOWN

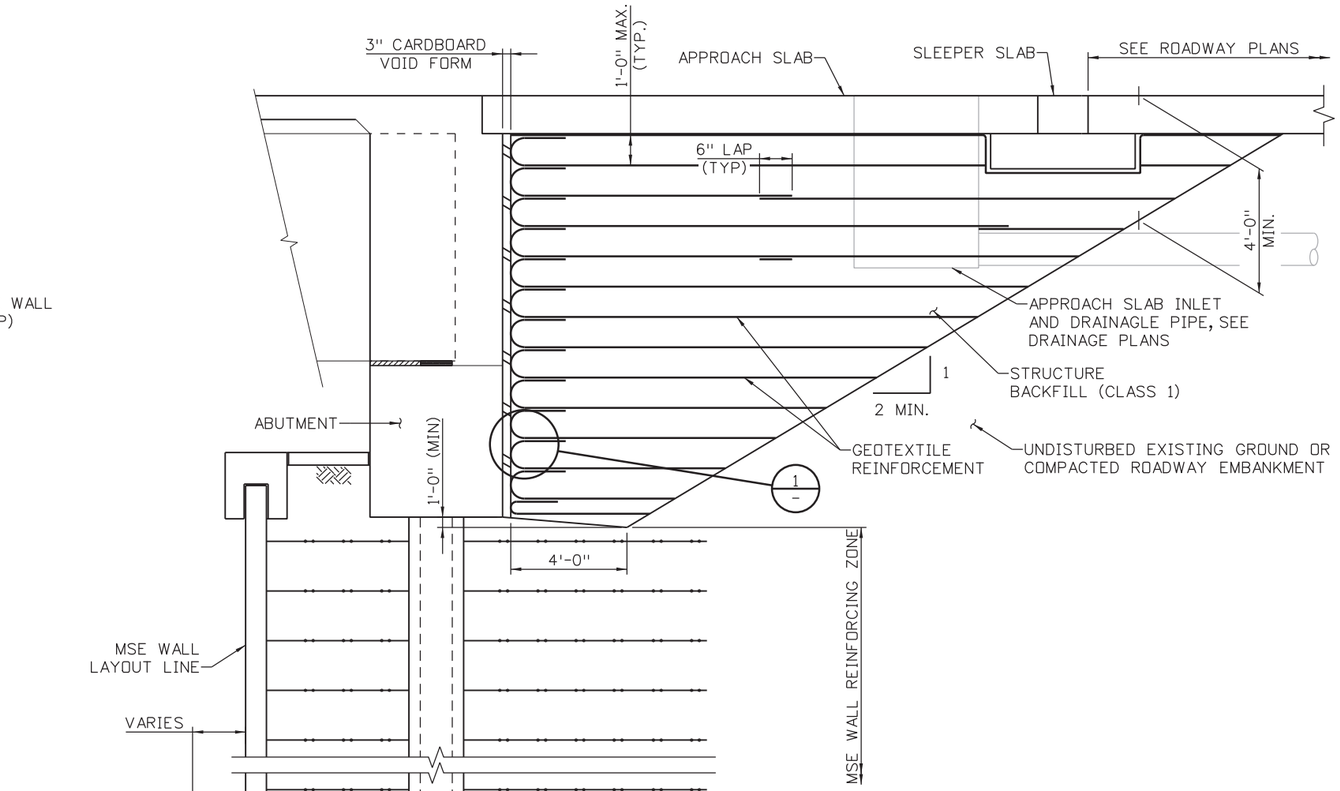

SECTION A/B12 A/B13

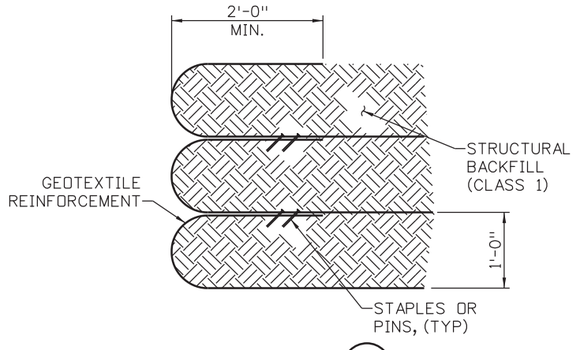

WRAP DETAIL 1

NOTES:

1. GEOTEXTILE REINFORCEMENT SHALL BE WOVEN FABRIC WITH A MINIMUM AVERAGE ROLL VALUE OF 4800 LB/FT FOR INSTALLATIONS WITH A GAP AND 2400 LB/FT FOR INSTALLATIONS WITHOUT A GAP BASED ON ASTM D4595.
2. GEOTEXTILE REINFORCEMENT SHALL BE PLACED BY ALTERNATING MACHINE DIRECTION (MD) WITH CROSS MACHINE DIRECTION (XD) FROM LAYER TO LAYER.
3. THE GEOTEXTILE REINFORCEMENT WRAP AT BACK FACE OF ABUTMENT AND WALL SHALL BE PULLED BACK SLACK FREE WITH ITS END ANCHORED TO SOIL UNDERNEATH WITH STAPLES OR PINS.
4. MINIMUM SPLICE OF ALL GEOFABRIC SHALL CONSIST OF 6" OVERLAP.
5. FOR MSE WALL REINFORCEMENT, DRAINAGE AND LEVELING PAD DETAILS, SEE MSE WALL GEOTECHNICAL DETAILS.
6. CONTRACTOR IS RESPONSIBLE FOR STABILITY OF ABUTMENT BACKFILL DURING CONSTRUCTION PHASING OPERATIONS.
7. EXCAVATION AND BACKFILL LIMITS SHALL BE PER CDOT STANDARD NO. M-206-2.
8. PAYMENT FOR ALL WORK ITEMS SHOWN WILL BE MADE UNDER ITEM 201 MECHANICAL REINFORCEMENT OF SOIL (CY) AND ITEM 206 STRUCTURE BACKFILL (CLASS 1) (CY).

Design			Detail			Quantities		
	INITIAL	DATE		INITIAL	DATE		INITIAL	DATE
Designed By	DRH	2/2019	Detailed By	KBK	2/2019	Quantities By	CMA	2/2019
Checked By	SPG	2/2019	Checked By	TLP	2/2019	Checked By	TLP	2/2019

pw:\\PWAPPDMA001:North_central_Omaha\Documents\2000020\DN0009931\0000000000259892\6.0_CAD_BIM\6.2_Work_In_Progress\NEPA Re-Eval Task\Bridge\Drawings\US85_NEPA_BRDG_MSE_Abutment_Backfill.dgn

DMADDOCK 2:50:45 PM

Print Date: 4/15/2021
File Name: US85_NEPA_BRDG_MSE_Abutment_Backfill.dgn
Horiz. Scale: 1:1 Vert. Scale: As Noted

HDR 1670 BROADWAY, SUITE 3400 DENVER, COLORADO 80202
Phone: 303-764-1520 FAX: 303-860-7139

Sheet Revisions		
Date:	Comments	Init.

DOUGLAS COUNTY COLORADO
Department of Public Works Phone: 303-660-7490
Engineering Division Fax: 303-660-9550
100 Third Street
Castle Rock, CO 80104

As Constructed
No Revisions:
Revised:
Void:

US 85 OVER C-470
ABUTMENT BACKFILL DETAILS

Designer: D HOBBS
Detailer: KATHRINEBERG
Sheet Subset: BRIDGE
Structure Numbers: F-16-ICA
Subset Sheets: 20 of 47

Project No./Code
0852-114
23474
Sheet Number 276

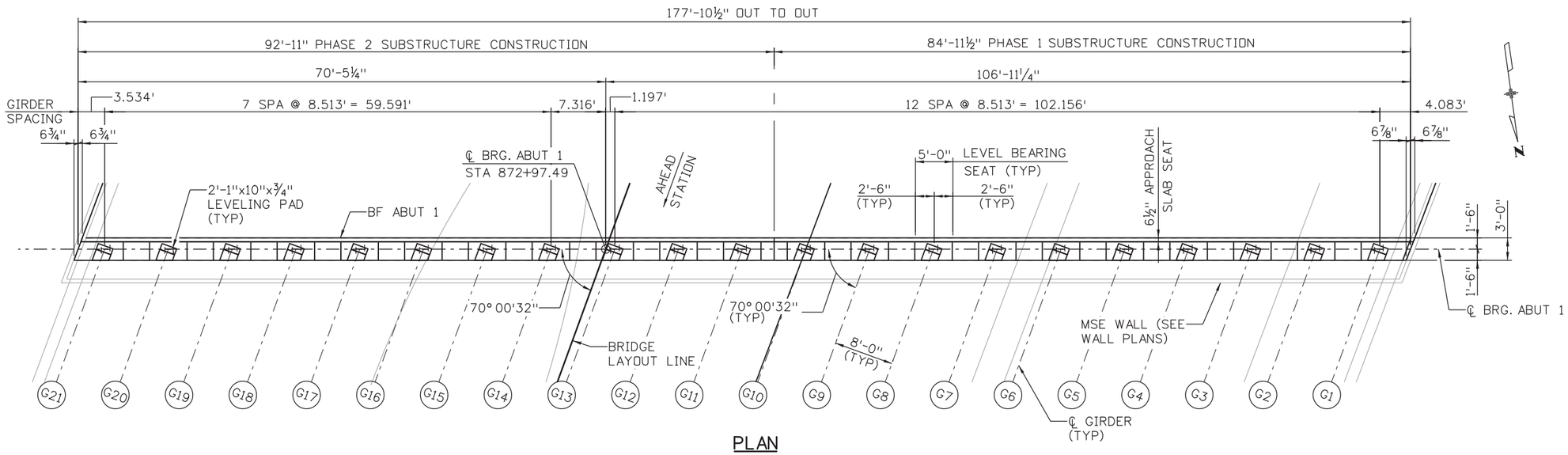

PLAN

(HCL NOT SHOWN FOR CLARITY)

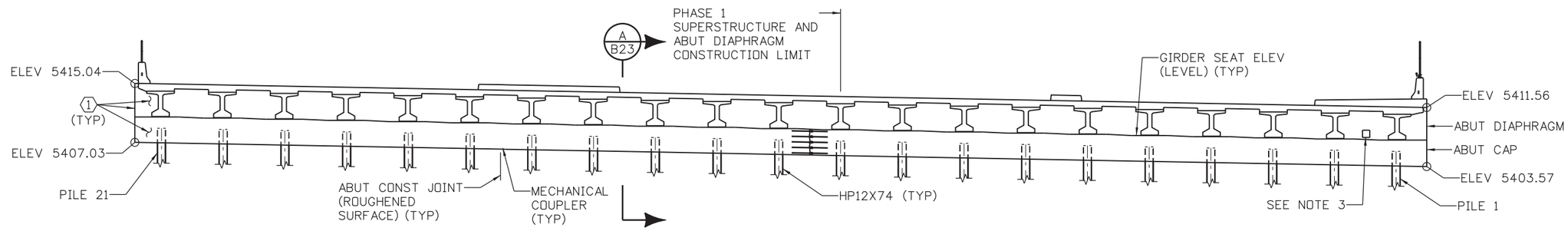

ELEVATION

LOOKING BACK STATION

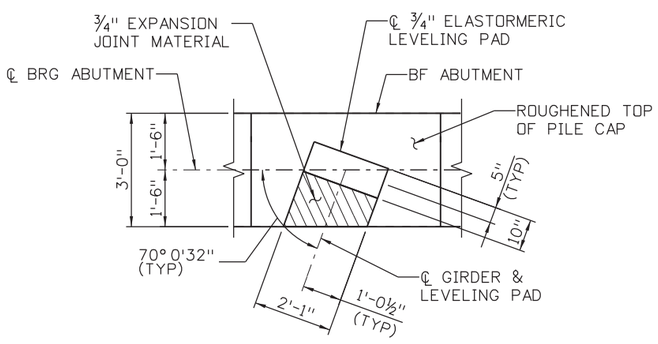

LEVELING PAD DETAIL

ABUT 1 GIRDER SEAT ELEVATIONS										
G1	G2	G3	G4	G5	G6	G7	G8	G9	G10	G11
5407.20	5407.37	5407.54	5407.71	5407.88	5408.05	5408.22	5408.39	5408.56	5408.72	5408.89
G12	G13	G14	G15	G16	G17	G18	G19	G20	G21	
5409.06	5409.22	5409.39	5409.55	5409.71	5409.88	5410.04	5410.20	5410.36	5410.53	

NOTES:

1. ABUTMENT CONCRETE SHALL BE CLASS D.
2. ELEVATIONS ARE PROVIDED AT CENTERLINE OF BEARING.
3. FOR UTILITY BLOCOUT DETAILS, SEE ABUTMENT DETAIL SHEET.
4. FOR SUPERSTRUCTURE AND ABUTMENT DIAPHRAGM CONSTRUCTION LIMITS, SEE DECK REINFORCING PLAN SHEET.

KEYNOTES:

1. LIMITS OF STRUCTURAL CONCRETE COATING - SAND, FEDERAL COLOR NO. 31667. EXTEND STRUCTURAL CONCRETE COATING 1'-0" BELOW FINISHED GRADE.

Design			Detail			Quantities		
	INITIAL	DATE		INITIAL	DATE		INITIAL	DATE
Designed By	DRH	2/2019	Detailed By	KBK	2/2019	Quantities By	GMA	2/2019
Checked By	SPD	2/2019	Checked By	TLP	2/2019	Checked By	TLP	2/2019

pw:\\PWAPPOMA001:North-Central_Omaha\Documents\200020\CDN0099931\000000000259892\6.0_CAD_BIM\6.2_Work_In_Progress\NEPA Re-Eval Task\Bridge\Drawings\US85_NEPA_BRDG_Abutment1_Plan&Elevation.dgn

DMADDOCK 2:50:47 PM

Print Date: 4/15/2021
File Name: US85_NEPA_BRDG_Abutment1_Plan&Elevation.dgn
Horiz. Scale: 1:1 Vert. Scale: As Noted

HDR
1670 BROADWAY, SUITE 3400 DENVER, COLORADO 80202
Phone: 303-764-1520 FAX: 303-860-7139

Sheet Revisions		
Date:	Comments	Init.

DOUGLAS COUNTY COLORADO
Department of Public Works Phone: 303-660-7490
Engineering Division Fax: 303-660-9550
100 Third Street
Castle Rock, CO 80104

As Constructed
No Revisions:
Revised:
Void:

US 85 OVER C-470
ABUTMENT 1
PLAN & ELEVATION

Designer: D HOBBS
Detailer: KATHRINEBERG
Sheet Subset: BRIDGE
Structure Numbers: F-16-ICA
Subset Sheets: 21 of 47

Project No./Code
0852-114
23474
Sheet Number 277

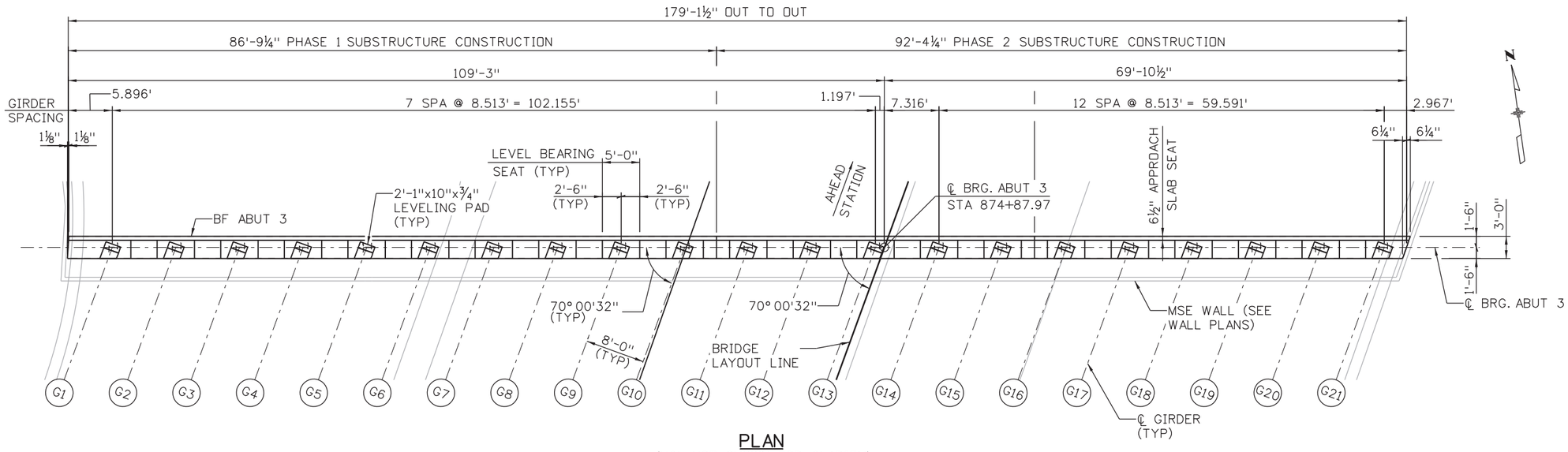

PLAN

(HCL NOT SHOWN FOR CLARITY)

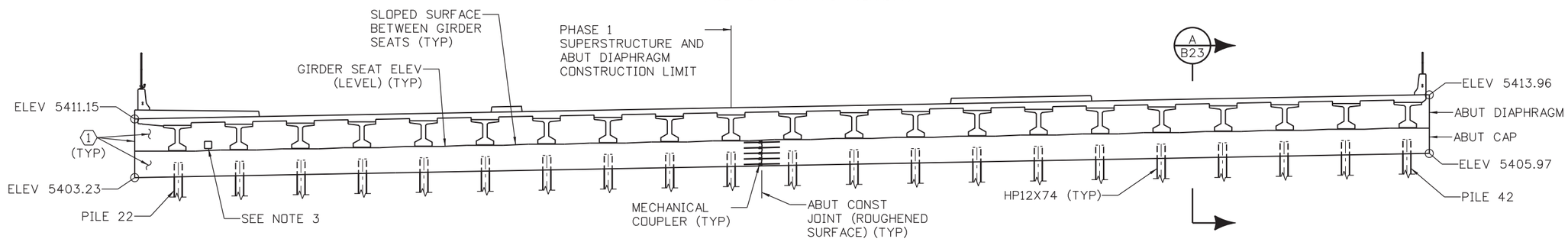

ELEVATION

LOOKING AHEAD STATION

ABUT 3 GIRDER SEAT ELEVATIONS										
G1	G2	G3	G4	G5	G6	G7	G8	G9	G10	G11
5406.82	5406.95	5407.09	5407.22	5407.36	5407.49	5407.63	5407.76	5407.90	5408.03	5408.16
G12	G13	G14	G15	G16	G17	G18	G19	G20	G21	
5408.29	5408.43	5408.56	5408.69	5408.82	5408.95	5409.08	5409.21	5409.34	5409.47	

NOTES:

1. ABUTMENT CONCRETE SHALL BE CLASS D.
2. ELEVATIONS ARE PROVIDED AT CENTERLINE OF BEARING.
3. FOR UTILITY BLOCKOUT DETAILS, SEE ABUTMNET DETAIL SHEET.
4. FOR SUPERSTRUCTURE AND ABUTMENT DIAPHRAGM CONSTRUCTION LIMITS, SEE DECK REINFORCEMENT PLAN SHEET.

KEYNOTES:

1. LIMITS OF STRUCTURAL CONCRETE COATING - SAND, FEDERAL COLOR NO. 31667. EXTEND STRUCTURAL CONCRETE COATING 1'-0" BELOW FINISHED GRADE.

Design			Detail			Quantities		
	INITIAL	DATE		INITIAL	DATE		INITIAL	DATE
Designed By	DRH	2/2019	Detailed By	KBK	2/2019	Quantities By	CMA	2/2019
Checked By	SPG	2/2019	Checked By	TLP	2/2019	Checked By	TLP	2/2019

pw:\\FWAPPDMA001:NorthCentral_Omaha\Documents\200020\CDN0099931\000000000259892\6.0_CAD_BIM\6.2_Work_In_Progress\NEPA Re-Eval Task\Bridge\Drawings\US85_NEPA_BRDG_Abutment3_Plan&Elevation.dgn

DMADDOCK 2:50:49 PM

Print Date: 4/15/2021
File Name: US85_NEPA_BRDG_Abutment3_Plan&Elevation.dgn
Horiz. Scale: 1:1 Vert. Scale: As Noted

HDR
1670 BROADWAY, SUITE 3400 DENVER, COLORADO 80202
Phone: 303-764-1520 FAX: 303-860-7139

Sheet Revisions		
Date:	Comments	Init.

DOUGLAS COUNTY COLORADO
Department of Public Works
Engineering Division
100 Third Street
Castle Rock, CO 80104
Phone: 303-660-7490
Fax: 303-660-9550

As Constructed
No Revisions:
Revised:
Void:

US 85 OVER C-470
ABUTMENT 3
PLAN & ELEVATION

Designer: D HOBBS
Detailer: KATHRINEBERG
Sheet Subset: BRIDGE
Structure Numbers: F-16-ICA
Subset Sheets: 22 of 47

Project No./Code
0852-114
23474
Sheet Number 278

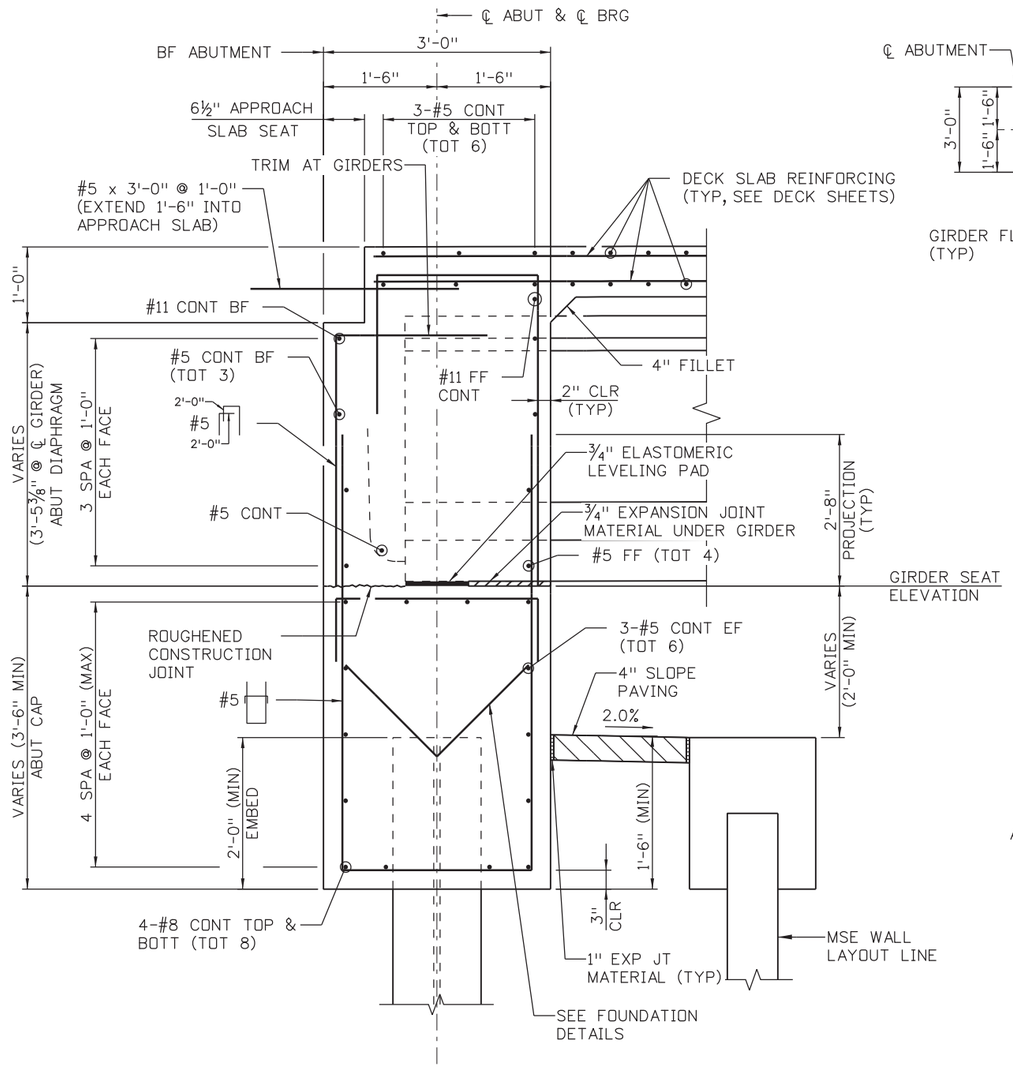

SECTION A B21 A B22

BETWEEN GIRDERS

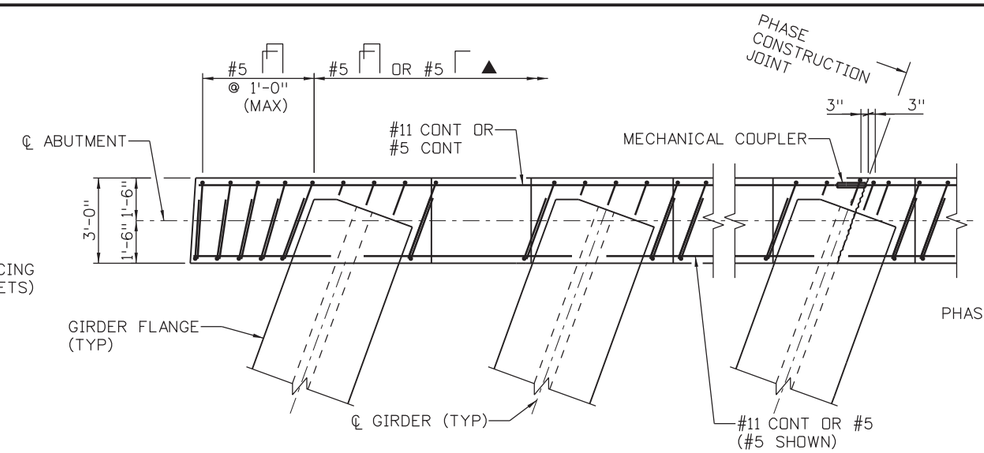

PARTIAL DIAPHRAGM PLAN

DECK NOT SHOWN

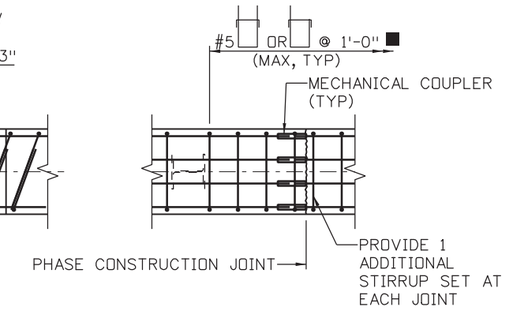

PARTIAL CAP PLAN

▲ PLACE PARALLEL TO ℄ GIRDER

■ PLACE PERPENDICULAR TO ℄ ABUT CAP

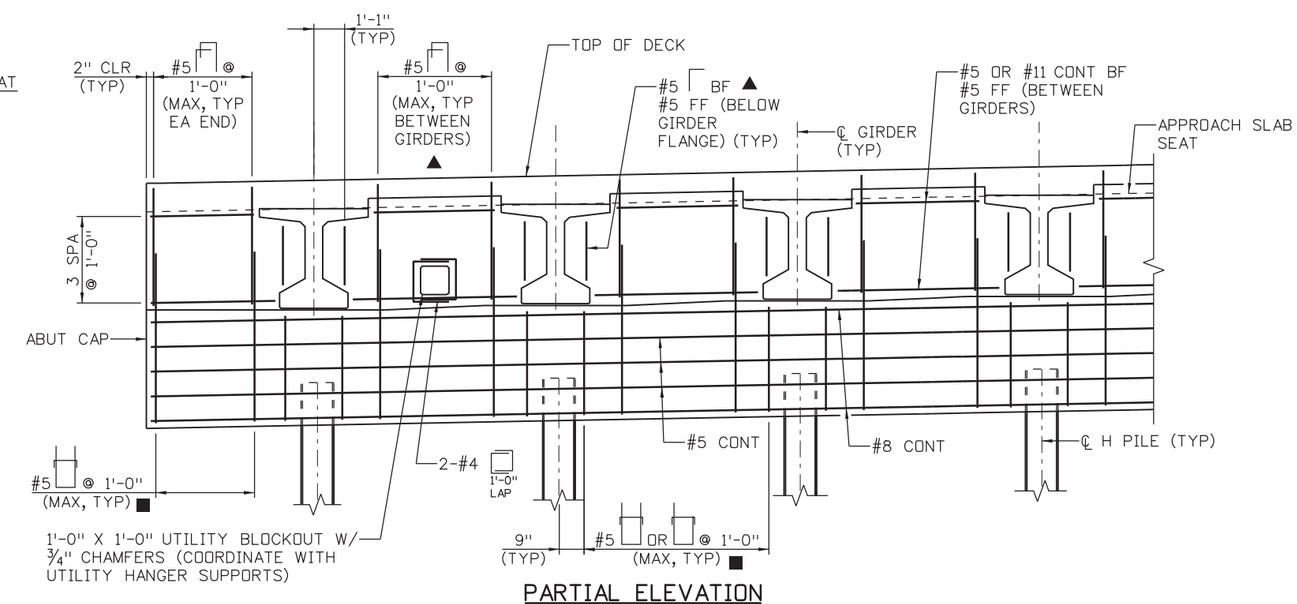

PARTIAL ELEVATION

BRIDGE RAIL, SIDEWALK AND OVERLAY NOT SHOWN

BARS ABOVE GIRDERS NOT SHOWN

NOTES:

1. CONTRACTOR SHALL PLACE DECK CONCRETE WITHIN TWO HOURS OF PLACING DIAPHRAGM CONCRETE.
2. A MINIMUM OF 3" CLEAR COVER SHALL BE PROVIDED AT MECHANICAL COUPLERS IN BOTTOM OF ABUT CAP AND 2" OF CLEAR COVER AT MECHANICAL COUPLERS ELSEWHERE IN ABUTMENT.
3. FIELD BEND OR CUT REINFORCING TO PROVIDE 2" CLEAR AT BEARING SEATS.

MINIMUM LAP SPLICE LENGTHS:
#5 HORIZONTAL BARS: 3'-0"
#8 HORIZONTAL BARS: 4'-8"

Design	INITIAL	DATE	Detail	INITIAL	DATE	Quantities	INITIAL	DATE
Designed By	DRH	2/2019	Detailed By	KBK	2/2019	Quantities By	CMA	2/2019
Checked By	SPD	2/2019	Checked By	TLP	2/2019	Checked By	TLP	2/2019

pw:\\PWAPPDMA001:NorthCentral_Dmans\Documents\200020\CDN0099931\0000000002598927\6.0_CAD_BIM\6.2_Work_In_Progress\NEPA Re-Eval Task\Bridge\Drawings\US85_NEPA_BRDG_Abutment Details_1.dgn

DMADDOCK 2:50:50 PM

Print Date: 4/15/2021

File Name: US85_NEPA_BRDG_Abutment Details_1.dgn

Horiz. Scale: 1:1 Vert. Scale: As Noted

HDR
1670 BROADWAY, SUITE 3400 DENVER, COLORADO 80202
Phone: 303-764-1520 FAX: 303-860-7139

Sheet Revisions		
Date:	Comments	Init.

DOUGLAS COUNTY COLORADO
Department of Public Works Phone: 303-660-7490
Engineering Division Fax: 303-660-9550
100 Third Street
Castle Rock, CO 80104

As Constructed

No Revisions:

Revised:

Void:

US 85 OVER C-470
ABUTMENT DETAILS

Designer:	D HOBBS	Structure Numbers	F-16-ICA
Detailer:	KATHRINEBERG		
Sheet Subset:	BRIDGE	Subset Sheets:	23 of 47

Project No./Code

0852-114

23474

Sheet Number 279

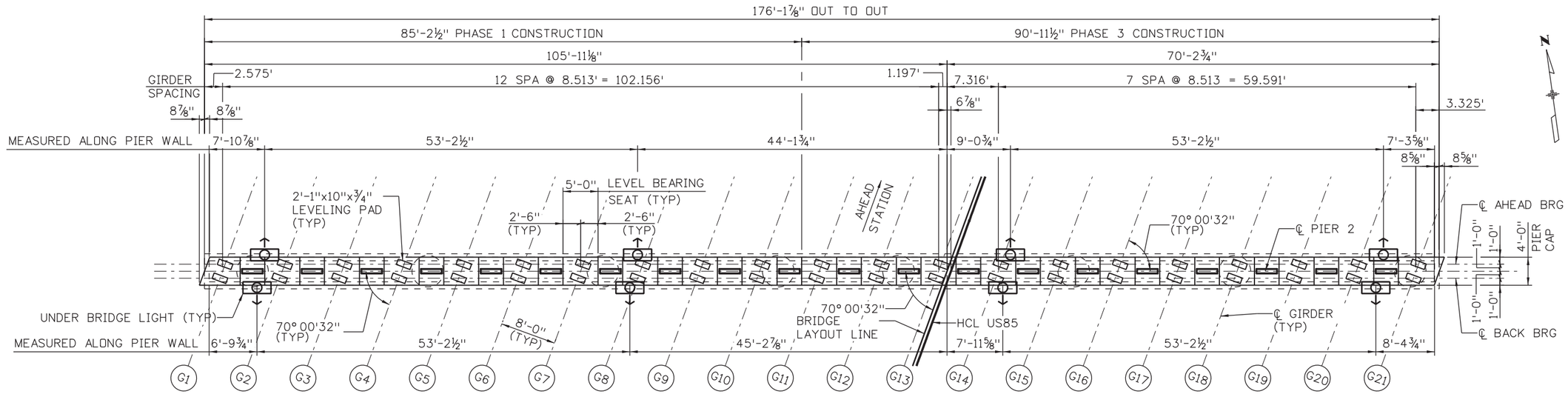

PLAN

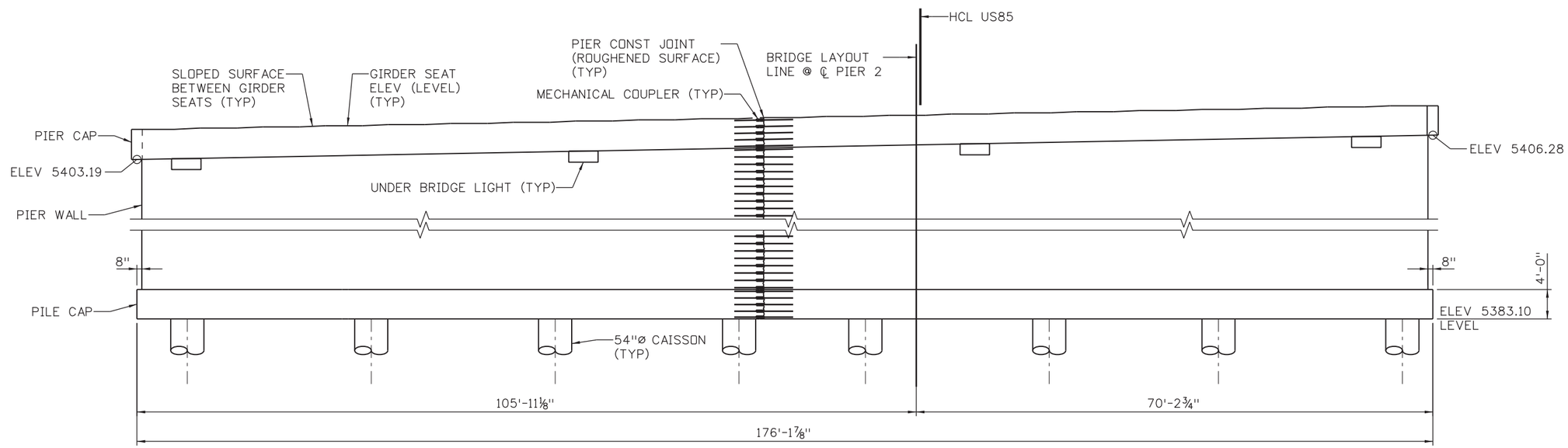

ELEVATION

PIER 2 GIRDER SEAT ELEVATIONS										
G1	G2	G3	G4	G5	G6	G7	G8	G9	G10	G11
5407.30	5407.45	5407.60	5407.76	5407.91	5408.06	5408.21	5408.36	5408.51	5408.66	5408.81
G12	G13	G14	G15	G16	G17	G18	G19	G20	G21	
5408.96	5409.11	5409.26	5409.41	5409.55	5409.70	5409.84	5409.99	5410.13	5410.28	

NOTES:

1. PIER CAP, PIER WALL, AND PILE CAP CONCRETE SHALL BE CLASS D.
2. ELEVATIONS ARE PROVIDED AT ℄ BRG.

Design	INITIAL	DATE	Detail	INITIAL	DATE	Quantities	INITIAL	DATE
Designed By	DRH	2/2019	Detailed By	KBK	2/2019	Quantities By	CMA	2/2019
Checked By	SPG	2/2019	Checked By	TLP	2/2019	Checked By	TLP	2/2019

pw:\\FWAPPDMA001:NorthCentral_Omaha\Documents\200020\CDN\0999931\000000000259892\6.0_CAD_BIM\6.2_Work_In_Progress\NEPA Re-Eval Task\Bridge\Drawings\US85_NEPA_BRDG_Pier2_Plan&Elevation.dgn

DMADDOCK 2:50:53 PM

Print Date: 4/15/2021
File Name: US85_NEPA_BRDG_Pier2_Plan&Elevation.dgn
Horiz. Scale: 1:1 Vert. Scale: As Noted

HDR 1670 BROADWAY, SUITE 3400 DENVER, COLORADO 80202
Phone: 303-764-1520 FAX: 303-860-7139

Sheet Revisions		
Date:	Comments	Init.

DOUGLAS COUNTY COLORADO
Department of Public Works Phone: 303-660-7490
Engineering Division Fax: 303-660-9550
100 Third Street
Castle Rock, CO 80104

As Constructed
No Revisions:
Revised:
Void:

US 85 OVER C-470
PIER 2
PLAN & ELEVATION

Designer: D HOBBS
Detailer: KATHRINEBERG
Sheet Subset: BRIDGE
Structure Numbers: F-16-ICA
Subset Sheets: 24 of 47

Project No./Code
0852-114
23474
Sheet Number 280

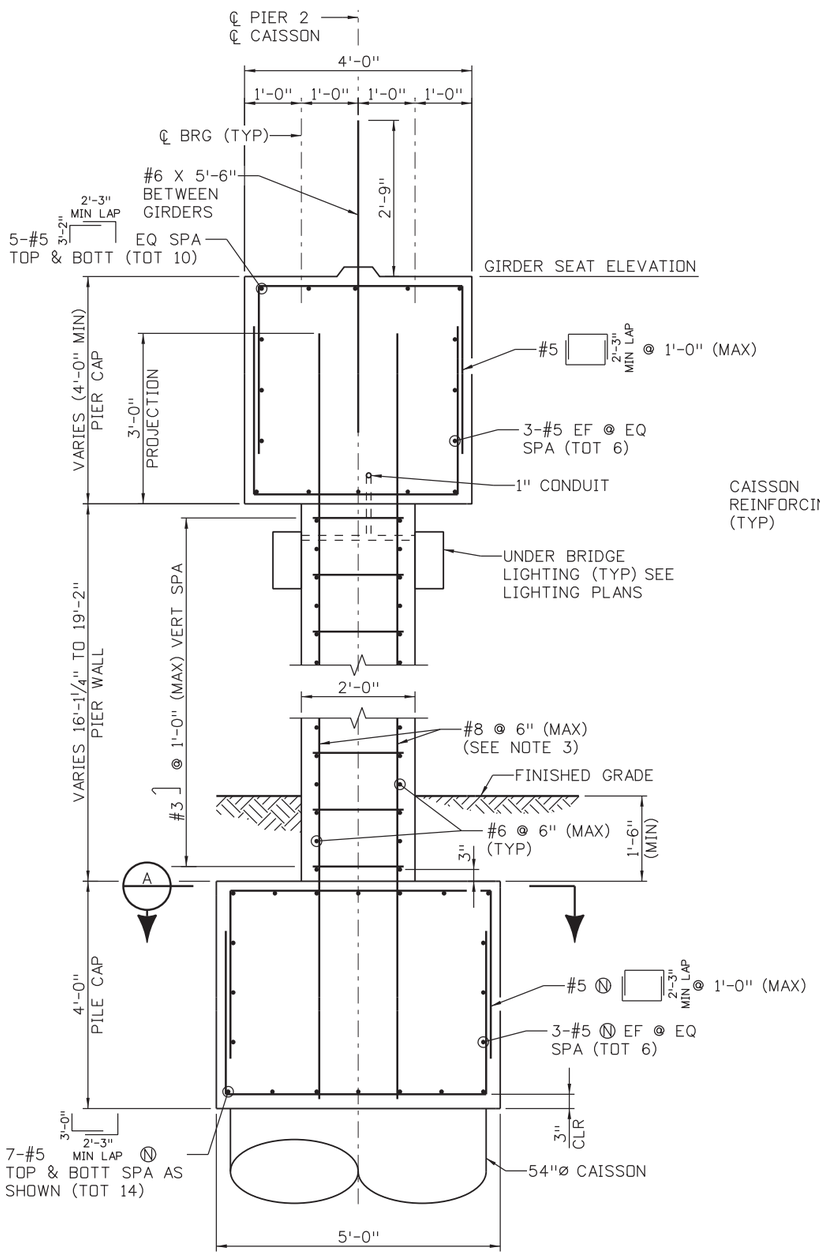

TYPICAL SECTION

CAISSON REINFORCING NOT SHOWN

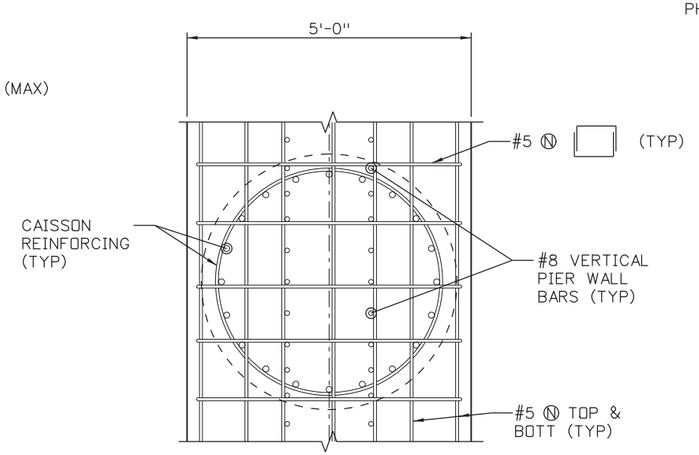

SECTION A

PILE CAP THREADING DETAIL

MINIMUM LAP SPLICE LENGTHS:
#5 HORIZONTAL BARS: 2'-11"
#6 HORIZONTAL BARS: 3'-6"
#8 VERTICAL BARS: LAP SPLICE NOT PERMISSIBLE

NOTES:

1. ALTERNATE HOOKED ENDS OF #3 TIES IN EACH ROW.
2. A MINIMUM OF 3" CLEAR COVER SHALL BE PROVIDED AT MECHANICAL COUPLERS IN BOTTOM OF PILE CAP AND 2" OF CLEAR COVER AT MECHANICAL COUPLERS ELSEWHERE IN PIER.
3. LAP SPLICES OF VERTICAL PIER WALL BARS ARE NOT PERMISSIBLE.

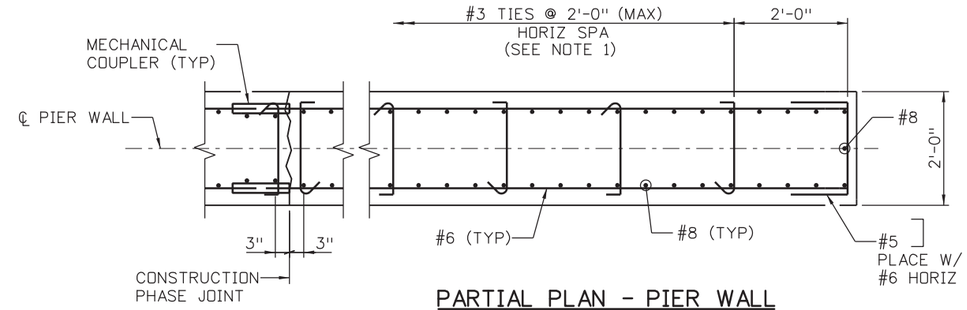

PARTIAL PLAN - PIER WALL

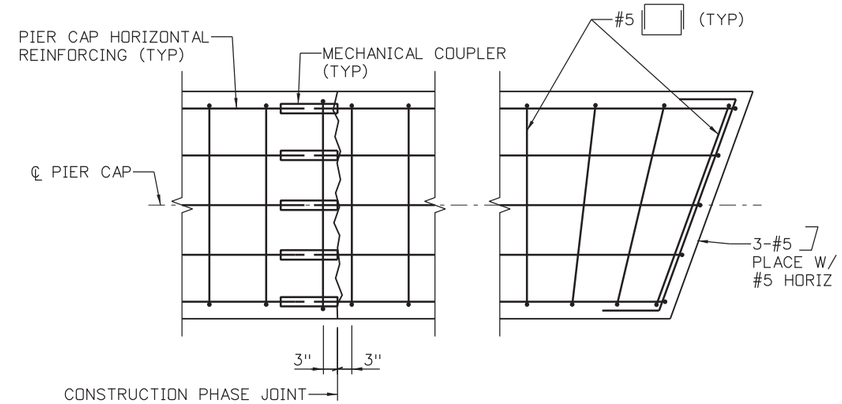

PARTIAL PLAN - PIER CAP

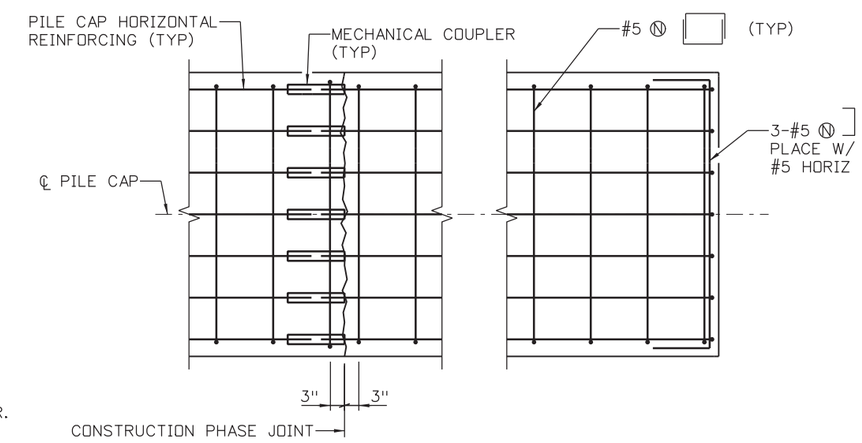

PARTIAL PLAN - PILE CAP

Design			Detail			Quantities		
	INITIAL	DATE		INITIAL	DATE		INITIAL	DATE
Designed By	DRH	2/2019	Detailed By	KBK	2/2019	Quantities By	CMA	2/2019
Checked By	SPO	2/2019	Checked By	TLP	2/2019	Checked By	TLP	2/2019

DMADDOCK 2:50:54 PM pw:\\PWAPPDMA001:North_Central_Omaha\Documents\200020\DN0039931\00000000002593892\6.0_CAD_BIM\6.2_Work_In_Progress\NEPA Re-Eval Task\Bridge\Drawings\US85_NEPA_BRDG_PierDetails_1.dgn

Print Date: 4/15/2021
File Name: US85_NEPA_BRDG_PierDetails_1.dgn
Horiz. Scale: 1:1 Vert. Scale: As Noted

HDR
1670 BROADWAY, SUITE 3400 DENVER, COLORADO 80202
Phone: 303-764-1520 FAX: 303-860-7139

Sheet Revisions		
Date:	Comments	Init.

DOUGLAS COUNTY COLORADO
Department of Public Works Phone: 303-660-7490
Engineering Division Fax: 303-660-9550
100 Third Street
Castle Rock, CO 80104

As Constructed
No Revisions:
Revised:
Void:

US 85 OVER C-470
PIER 2 DETAILS (1 OF 2)

Designer:	D HOBBS	Structure Numbers	F-16-ICA
Detailer:	KATHRINEBERG		
Sheet Subset:	BRIDGE	Subset Sheets:	25 of 47

Project No./Code
0852-114
23474
Sheet Number 281

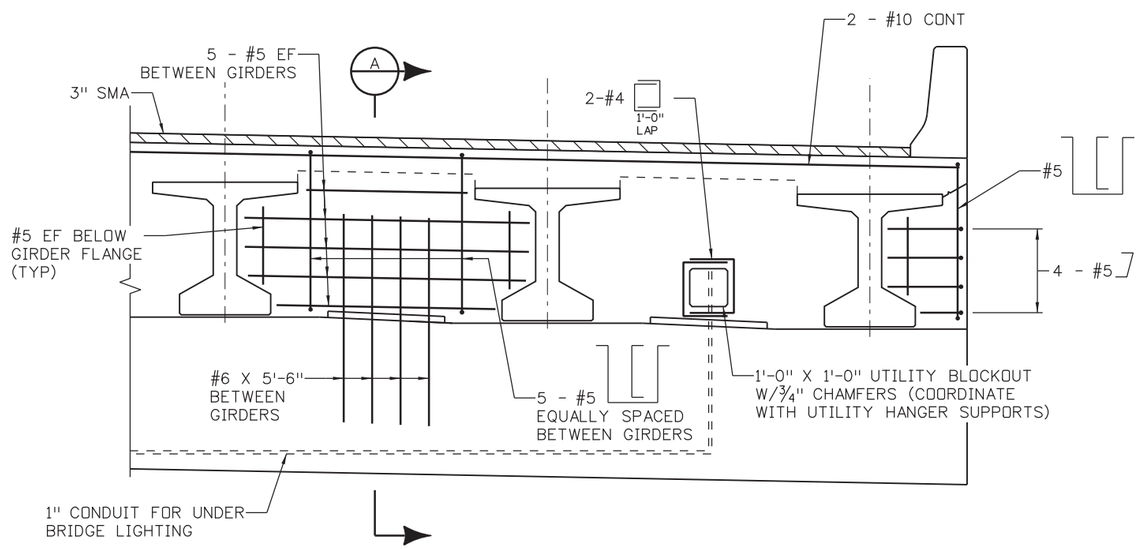

PIER DIAPHRAGM ELEVATION

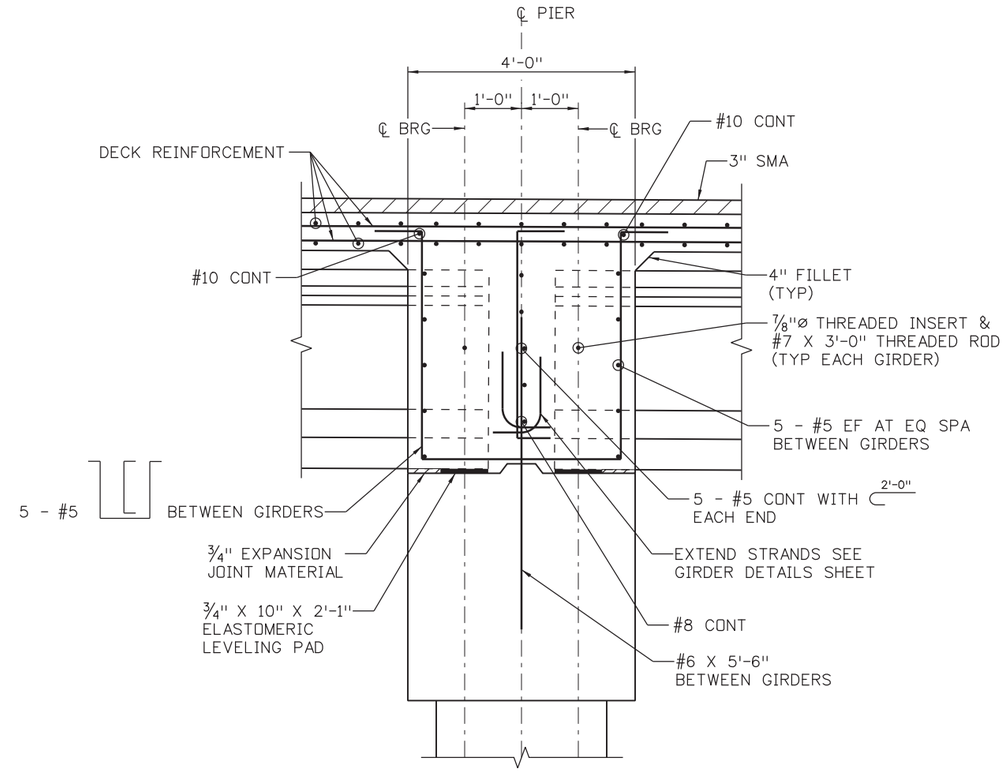

SECTION A

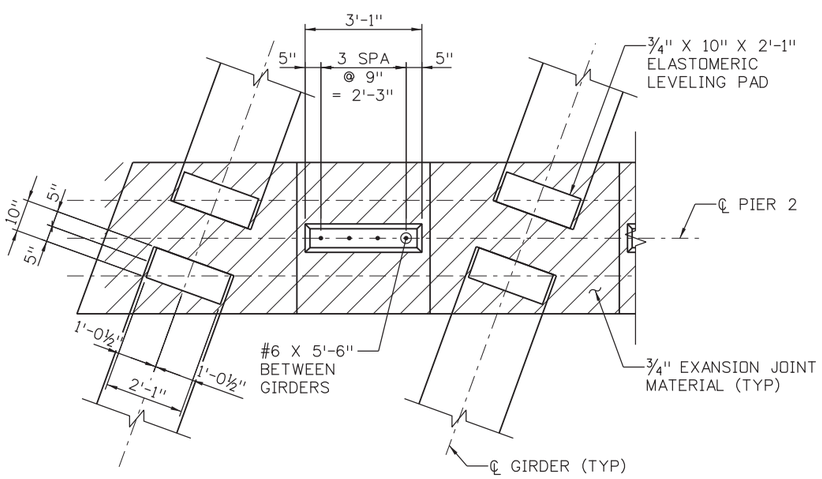

LEVELING PAD DETAIL

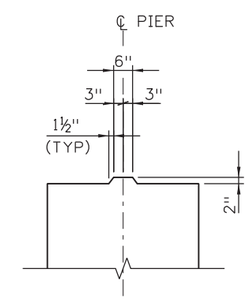

PIER CAP SHEAR KEY DETAIL
(REINFORCING NOT SHOWN FOR CLARITY)

NOTES:

1. CONTRACTOR SHALL PLACE DECK CONCRETE WITHIN TWO HOURS OF PLACING DIAPHRAGM CONCRETE.

Design	INITIAL	DATE	Detail	INITIAL	DATE	Quantities	INITIAL	DATE
Designed By	DRH	2/2019	Detailed By	KBK	2/2019	Quantities By	CMA	2/2019
Checked By	SPD	2/2019	Checked By	TLP	2/2019	Checked By	TLP	2/2019

pw:\\FWAPPDMA001:NorthCentral_Omaha\Documents\200020\CDN0099931\0000000002\59892\6.0_CAD_BIM\6.2_Work_In_Progress\NEPA Re-Eval Task\Bridge\Drawings\US85_NEPA_BRDG_PierDetails_2.dgn

DMADDOCK 2:50:56 PM

Print Date: 4/15/2021
File Name: US85_NEPA_BRDG_PierDetails_2.dgn
Horiz. Scale: 1:1 Vert. Scale: As Noted

HDR
1670 BROADWAY, SUITE 3400 DENVER, COLORADO 80202
Phone: 303-764-1520 FAX: 303-860-7139

Sheet Revisions		
Date:	Comments	Init.

DOUGLAS COUNTY
COLORADO
Department of Public Works Phone: 303-660-7490
Engineering Division Fax: 303-660-9550
100 Third Street
Castle Rock, CO 80104

As Constructed
No Revisions:
Revised:
Void:

US 85 OVER C-470
PIER 2 DETAILS (2 OF 2)

Designer:	D HOBBS	Structure Numbers	F-16-ICA
Detailer:	KATHRINEBERG		
Sheet Subset:	BRIDGE	Subset Sheets:	26 of 47

Project No./Code
0852-114
23474
Sheet Number 282

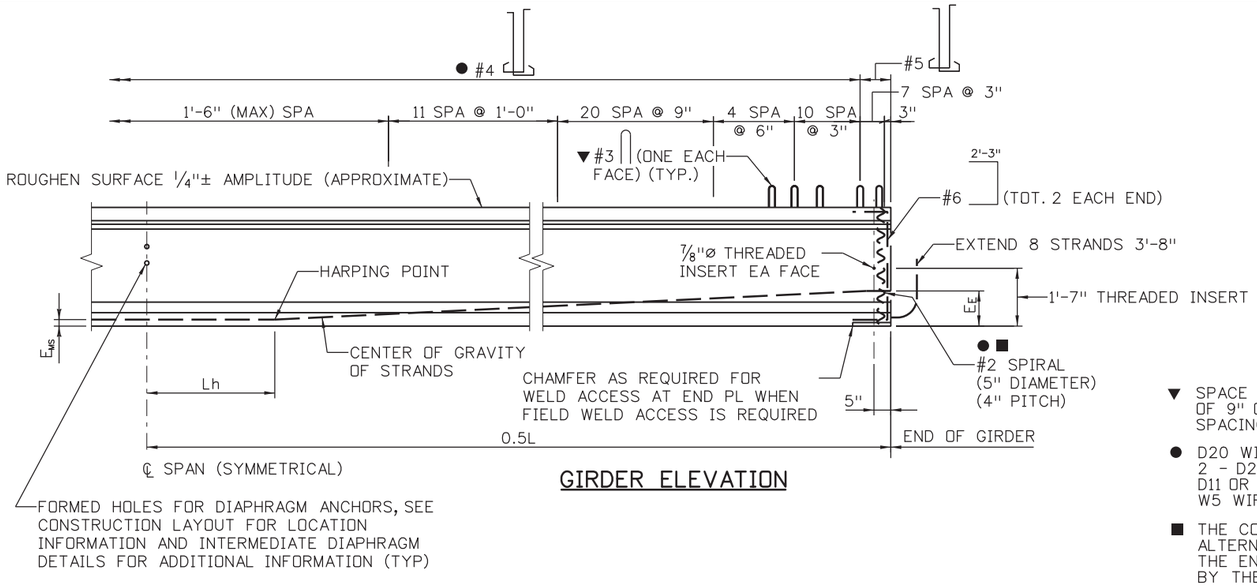

GIRDER ELEVATION

▼ SPACE WITH #4 AND #5 ● FOR STIRRUP SPACINGS OF 9" OR MORE. SPACE AT 1'-0" FOR STIRRUP SPACINGS LESS THAN 9".

● D20 WIRES MAY BE USED IN LIEU OF #4.
2 - D20 WIRES MAY BE USED IN LIEU OF #6.
D11 OR W10.9 WIRES MAY BE USED IN LIEU OF #3.
W5 WIRES MY BE USED IN LIEU OF #2.

■ THE CONTRACTOR MAY SUBMIT AN ALTERNATE CROSS TIE ARRANGEMENT, AT THE END OF THE WEB, FOR APPROVAL BY THE ENGINEER.

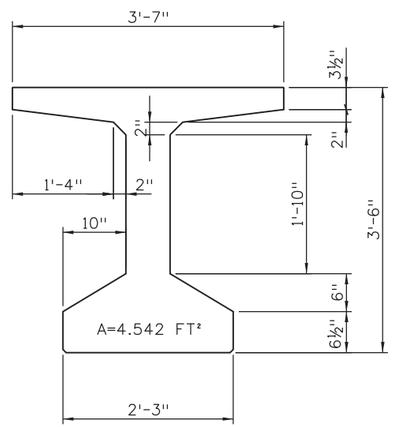

BT 42 DETAIL

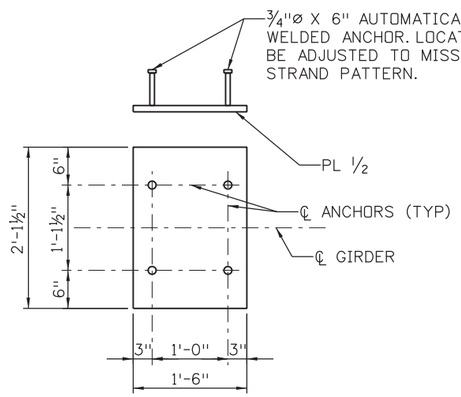

END PLATE DETAIL

GALVANIZE AFTER FABRICATION

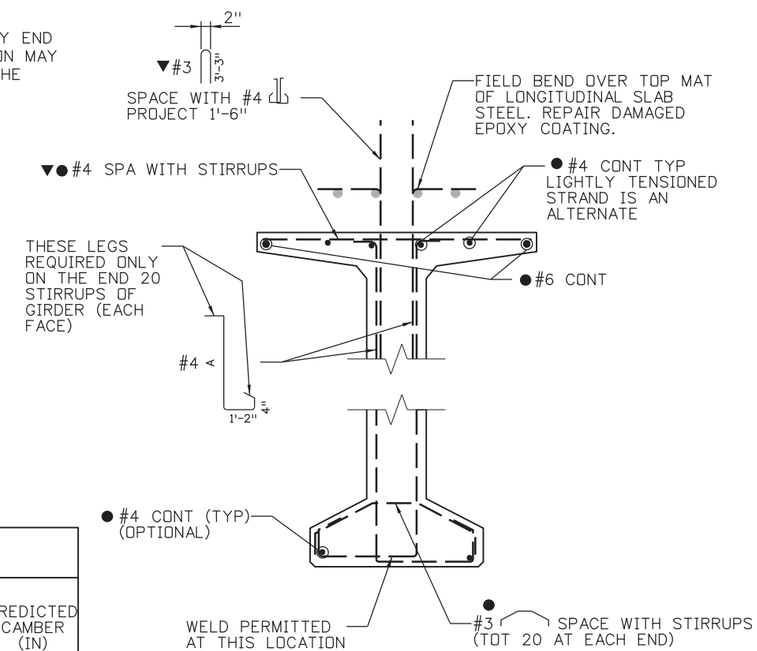

TYPICAL GIRDER SECTION

A = GIRDER DEPTH - 3"

GIRDER SCHEDULE

GIRDER TYPE	SPAN NO.	GIRDER NO.	L (FT)	Lh (FT)	A_s* (SQ IN)	E_{MS} (IN)	E_F (IN)	F_j (KIPS)	F_f (KIPS)	CONCRETE STRENGTH F'_{ci} (PSI)	CONCRETE STRENGTH F'_c (PSI)	Δ (IN)	PREDICTED RELEASE CAMBER (IN)	PREDICTED CAMBER (IN)
BT42	1-2	1 & 21	95.083	9.5	7.378	4.35	13.18	1494	1279	6500	8500	-1.6	2.2	3.8
BT42	1-2	2-20	95.083	9.5	7.378	4.35	13.18	1494	1285	6500	8500	-1.9	2.2	3.8

NOTES:

ALL WORK NECESSARY TO FABRICATE AND INSTALL THE INTEGRAL PARTS OF THE GIRDER (INCLUDING THE INTERMEDIATE DIAPHRAGMS, 7/8"ø THREADED RODS, AND LEVELING PADS), AS SHOWN ON THE PLANS, SHALL BE INCLUDED IN THE BID PRICE FOR ITEM NO. 618, PRESTRESSED CONCRETE I (BT42), WITH A PAY UNIT OF LF WHICH SHALL BE MEASURED BY DIMENSION L.

WHEN APPROVED BY THE ENGINEER, A MINIMUM OF TACK WELDING WILL BE PERMITTED ON ASTM A706 UNCOATED REINFORCING STEEL.

REINFORCING PROJECTING FROM THE TOP OF THE GIRDER AND REINFORCING WITHIN EIGHT FEET OF AN EXPANSION DEVICE IN THE BRIDGE DECK SHALL BE EPOXY COATED. DAMAGED COATING ON GIRDER REINFORCING WITHIN THE GIRDER NEED NOT BE REPAIRED. THE MINIMUM COVER FOR REINFORCING STEEL IS 1".

AT GIRDER ENDS NOT EMBEDDED IN CONCRETE DIAPHRAGMS, CUT STRANDS OFF 1" BELOW THE SURFACE OF THE CONCRETE AND FINISH WITH AN APPROVED EPOXY GROUT. AT GIRDER ENDS EMBEDDED IN CONCRETE DIAPHRAGMS, CUT STRANDS TO PROJECT 3", EXCEPT AS SHOWN. DO NOT MAKE COSMETIC REPAIRS (DAMAGE LESS THAN 1½" DEEP) TO THE PARTS OF THE GIRDERS EMBEDDED IN CONCRETE.

USE LOW RELAXATION STRANDS MEETING THE REQUIREMENTS OF ASTM A-416 GRADE 270. THE MINIMUM CLEAR DISTANCE BETWEEN GROUPS OR INDIVIDUAL STRANDS SHALL BE 2.3(d_s) BUT NOT LESS THAN 1½". THE MINIMUM COVER FOR PRESTRESSING STEEL IS 1½".

A MINIMUM OF TWO HARPING POINTS SHALL BE USED PER GIRDER. HARPED STRANDS SHALL BE WELL DISTRIBUTED AT THE GIRDER ENDS, STARTING WITHIN 4" OF THE TOP OF THE GIRDER AND DISTRIBUTED SUCH THAT THERE IS NO SPACE BETWEEN STRANDS GREATER THAN 1'-0" AT THE END OF THE GIRDER. AS AN ALTERNATE THE CONTRACTOR MAY PLACE #4 ● X 10'-0" IN THE SIDES OF THE END OF THE WEB PARALLEL TO THE HARPED STRANDS SUCH THAT THERE IS NO SPACE GREATER THAN 1'-0".

A_s* = MINIMUM AREA OF THE PRESTRESSING STEEL.
d_s = NOMINAL STRAND DIAMETER.
f'_s = ULTIMATE STRENGTH OF PRESTRESSING STEEL.
F_j = JACKING FORCE PER GIRDER.
F_f = FINAL FORCE PER GIRDER AFTER ALL LOSSES.
f'_{ci} = REQUIRED CONCRETE STRENGTH AT RELEASE OF PRESTRESS FORCE.
f'_c = REQUIRED CONCRETE STRENGTH AT 28 DAYS OF AGE.
L = LENGTH OF GIRDER ALONG THE GRADE OF THE GIRDER.
Δ = DEFLECTION AT CENTERLINE OF SPAN DUE TO CAST-IN-PLACE SLAB, DIAPHRAGMS, ASPHALT, CURBS, RAILS, AND WALKS.

CONCRETE SHALL BE CLASS PS.

ENTRAINED AIR IS NOT REQUIRED FOR GIRDER CONCRETE.

USE ½" CHAMFER ON ALL CORNERS, EXCEPT AS NOTED.

PREDICTED CAMBER IS THE CAMBER FOR THE GIRDER ALONE AT 60 DAYS. ACCEPTABLE CAMBER VARIABILITY IS LIMITED TO 20% OVER THE PREDICTED CAMBER AND 50% UNDER THE PREDICTED CAMBER OR ± 1 INCH, WHICHEVER IS GREATER. THE CONTRACTOR SHALL REPORT TO THE ENGINEER VALUES OF CAMBER WHICH REQUIRE REMEDIAL MEASURES. THE REMEDIAL MEASURES SHALL BE REVIEWED AND APPROVED BY THE ENGINEER. THE COSTS ASSOCIATED WITH ALL REMEDIAL MEASURES SHALL BE BORNE BY THE CONTRACTOR.

Design	INITIAL	DATE	Detail	INITIAL	DATE	Quantities	INITIAL	DATE
Designed By	DRH	2/2019	Detailed By	KBK	2/2019	Quantities By	CMA	2/2019
Checked By	SPD	2/2019	Checked By	TLP	2/2019	Checked By	TLP	2/2019

pw:\\PWAPPDMA001\NorthCentral_Umaha\Documents\200020\CDN0099931\00000000025989\2\6.0_CAD_BIM\6.2_Work_In_Progress\NEPA Re-Eval Task\Bridge\Drawings\US85_NEPA_BRDG_PRESTRESSED-CONCRETE-I.DGN

DMADDOCK 2:50:57 PM

Print Date: 4/15/2021
File Name: US85_NEPA_BRDG_PRESTRESSED-CONCRETE-I.DGN
Horiz. Scale: 1:1 Vert. Scale: As Noted

HDR
1670 BROADWAY, SUITE 3400 DENVER, COLORADO 80202
Phone: 303-764-1520 FAX: 303-860-7139

Sheet Revisions

Date:	Comments	Init.

DOUGLAS COUNTY COLORADO
Department of Public Works Phone: 303-660-7490
Engineering Division Fax: 303-660-9550
100 Third Street
Castle Rock, CO 80104

As Constructed
No Revisions:
Revised:
Void:

US 85 OVER C-470
PRESTRESSED CONCRETE I GIRDER

Designer: D HOBBS
Detailer: KATHRINEBERG
Structure Numbers: F-16-ICA
Sheet Subset: BRIDGE
Subset Sheets: 27 of 47

Project No./Code
0852-114
23474
Sheet Number 283

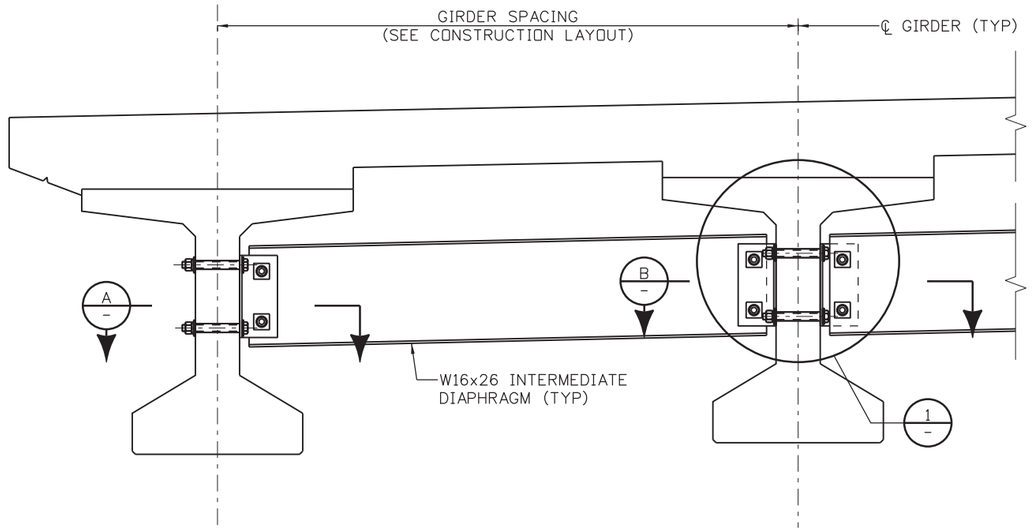

PARTIAL ELEVATION AT DIAPHRAGM

(TAKEN NORMAL TO GIRDER)

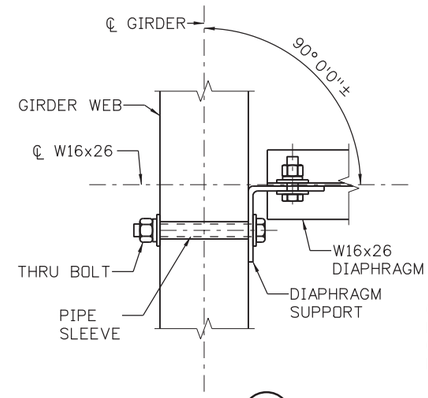

SECTION A

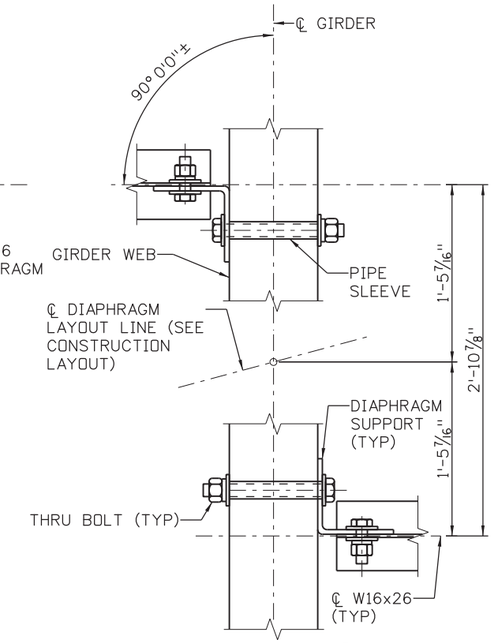

SECTION B

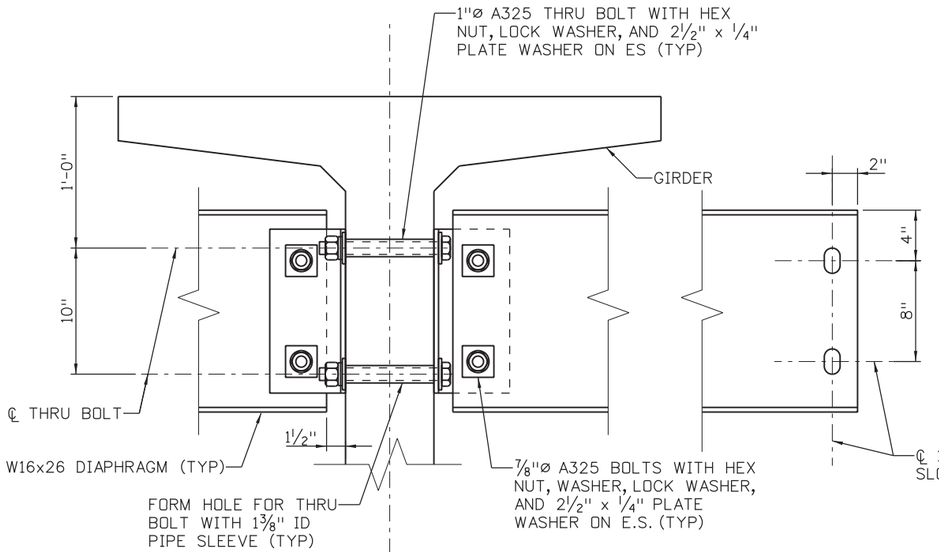

DETAIL 1

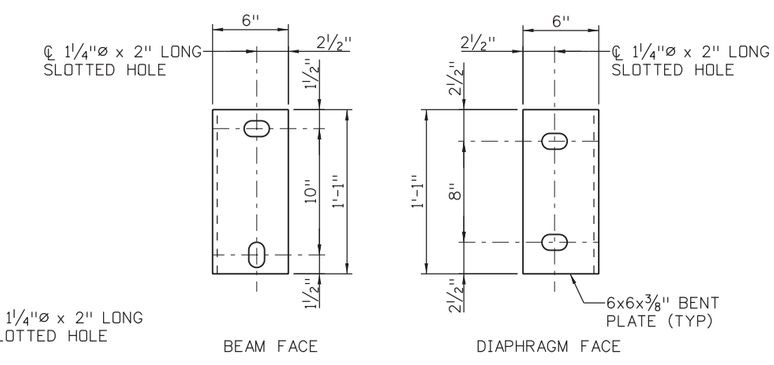

DIAPHRAGM SUPPORT DETAIL

NOTES:

1. SEE CONSTRUCTION LAYOUT FOR INTERMEDIATE DIAPHRAGM LOCATIONS.
2. ALL DIAPHRAGM MATERIALS, INCLUDING BOLTS, NUTS, AND WASHERS SHALL BE GALVANIZED. GALVANIZE AFTER FABRICATION.
3. BOLTS, NUTS AND LOCK WASHERS MAY BE ZINC PLATED IN LIEU OF BEING GALVANIZED.
4. THE CONTRACTOR IS RESPONSIBLE FOR DETERMINING NECESSARY BRACING REQUIREMENTS AND FOR PROVIDING ADEQUATE BRACING FOR THE SPECIFIC WIND AND WEATHER CONDITIONS TO BE ENCOUNTERED.
5. WHEN BRACING OR DIAPHRAGMS ARE REQUIRED, NO GIRDERS SHALL BE ERECTED AND LEFT UNBRACED. THE INTERMEDIATE DIAPHRAGMS (WHEN USED) SHALL BE CONNECTED TO THE ADJACENT GIRDERS SIMULTANEOUSLY WITH THE ERECTION OF THE GIRDERS.
6. USE AND INSTALLATION OF THE INTERMEDIATE DIAPHRAGMS SHALL NOT RELIEVE THE CONTRACTOR OF FULL RESPONSIBILITY TO CONSTRUCT THE WORK IN A MANNER WHICH PROVIDES ALL NECESSARY RIGIDITY, SUPPORTS ALL LOADS IMPOSED, AND PROVIDES IN THE FINISHED STRUCTURE THE LINES AND GRADES INDICATED ON THE PLANS.

Design	INITIAL	DATE	Detail	INITIAL	DATE	Quantities	INITIAL	DATE
Designed By	DRH	2/2019	Detailed By	KBK	2/2019	Quantities By	CMA	2/2019
Checked By	SPD	2/2019	Checked By	TLP	2/2019	Checked By	TLP	2/2019

pw:\\PWAPPDMA001:NorthCentral_Omaha\Documents\200020\CDN0099931\0000000002259892\6.0_CAD_BIM\6.2_Work_In_Progress\NEPA Re-Eval Task\Bridge\Drawings\US85_NEPA_BRDG_IntermediateDiaphragms.dgn

DMADDOCK 2:50:59 PM

Print Date: 4/15/2021
File Name: US85_NEPA_BRDG_IntermediateDiaphragms.dgn
Horiz. Scale: 1:1 Vert. Scale: As Noted

HDR
1670 BROADWAY, SUITE 3400 DENVER, COLORADO 80202
Phone: 303-764-1520 FAX: 303-860-7139

Sheet Revisions		
Date:	Comments	Init.

DOUGLAS COUNTY
COLORADO
Department of Public Works Phone: 303-660-7490
Engineering Division Fax: 303-660-9550
100 Third Street
Castle Rock, CO 80104

As Constructed
No Revisions:
Revised:
Void:

US 85 OVER C-470
INTERMEDIATE DIAPHRAGM
DETAILS

Designer:	D HOBBS	Structure Numbers	F-16-ICA
Detailer:	KATHRINEBERG		
Sheet Subset:	BRIDGE	Subset Sheets:	28 of 47

Project No./Code
0852-114
23474
Sheet Number 284

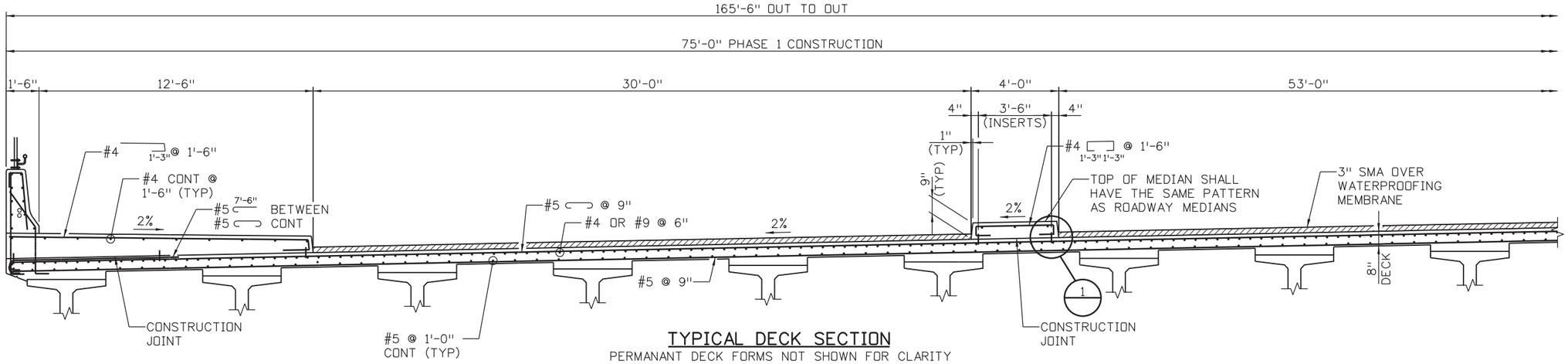

TYPICAL DECK SECTION

PERMANANT DECK FORMS NOT SHOWN FOR CLARITY

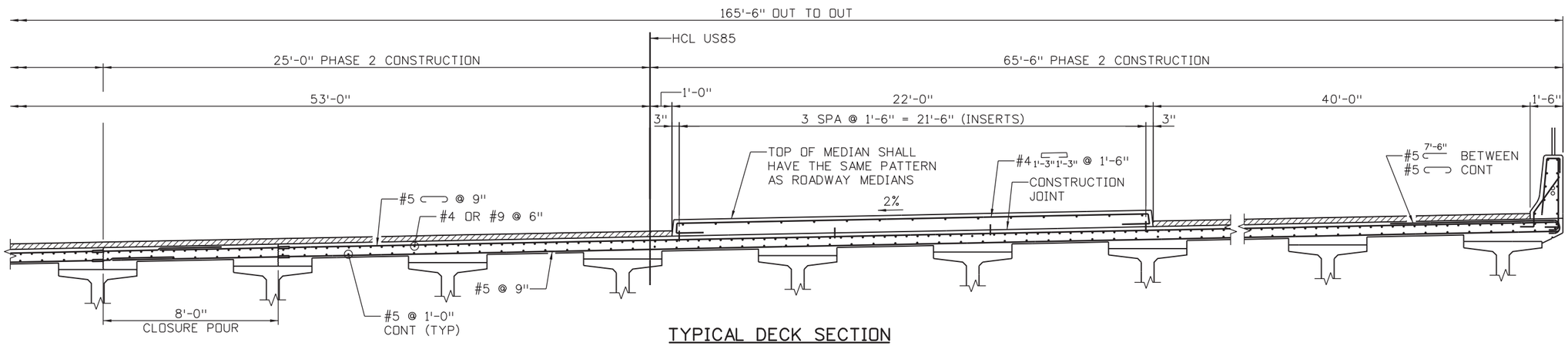

TYPICAL DECK SECTION

PERMANANT DECK FORMS NOT SHOWN FOR CLARITY

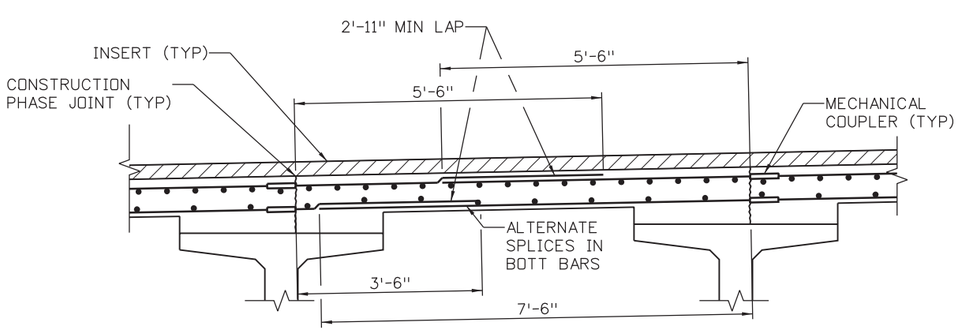

CLOSURE POUR DETAIL

NOTES:

1. CONTRACTOR MAY SUBMIT ALTERNATIVE INSERTS TO BE APPROVED BY THE ENGINEER.
2. SEE CONSTRUCTION PHASING SHEETS FOR SIDEWALK AND MEDIAN PHASING.
3. SIDEWALK AND MEDIAN CONCRETE SHALL NOT BE PLACED UNTIL DECK AND CLOSURE POUR CONCRETE HAS FULLY CURED ACROSS FULL WIDTH OF BRIDGE.

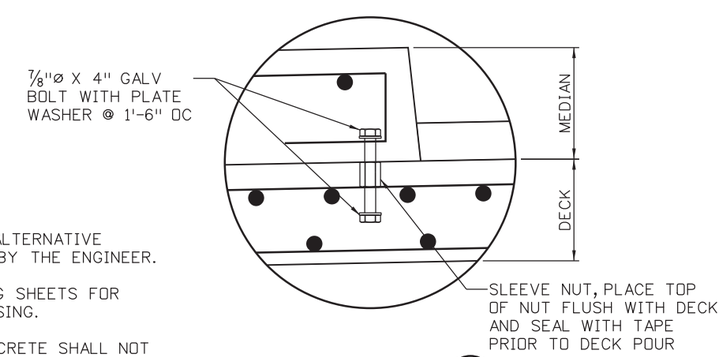

INSERT DETAIL 1

Design	INITIAL	DATE
Designed By	DRH	2/2019
Checked By	SPD	2/2019

Detail	INITIAL	DATE
Detailed By	KBK	2/2019
Checked By	TLP	2/2019

Quantities	INITIAL	DATE
Quantities By	CMA	2/2019
Checked By	TLP	2/2019

pw:\\PWAPPOMA001:NorthCentral_Omaha\Documents\200020\CDN0099931\0000000002598927\6.0_CAD_BIM\6.2_Work_In_Progress\NEPA Re-Eval Task\Bridge\Drawings\US85_NEPA_BRDG_TypicalDeckSection.dgn

DMADDOCK 2:51:00 PM

Print Date: 4/15/2021
File Name: US85_NEPA_BRDG_TypicalDeckSection.dgn
Horiz. Scale: 1:1 Vert. Scale: As Noted

HDR
1670 BROADWAY, SUITE 3400 DENVER, COLORADO 80202
Phone: 303-764-1520 FAX: 303-860-7139

Sheet Revisions		
Date:	Comments	Init.

DOUGLAS COUNTY COLORADO
Department of Public Works Phone: 303-660-7490
Engineering Division Fax: 303-660-9550
100 Third Street
Castle Rock, CO 80104

As Constructed
No Revisions:
Revised:
Void:

US 85 OVER C-470
TYPICAL DECK SECTION

Designer:	D HOBBS	Structure Numbers	F-16-ICA
Detailer:	KATHRINEBERG		
Sheet Subset:	BRIDGE	Subset Sheets:	29 of 47

Project No./Code
0852-114
23474
Sheet Number 285

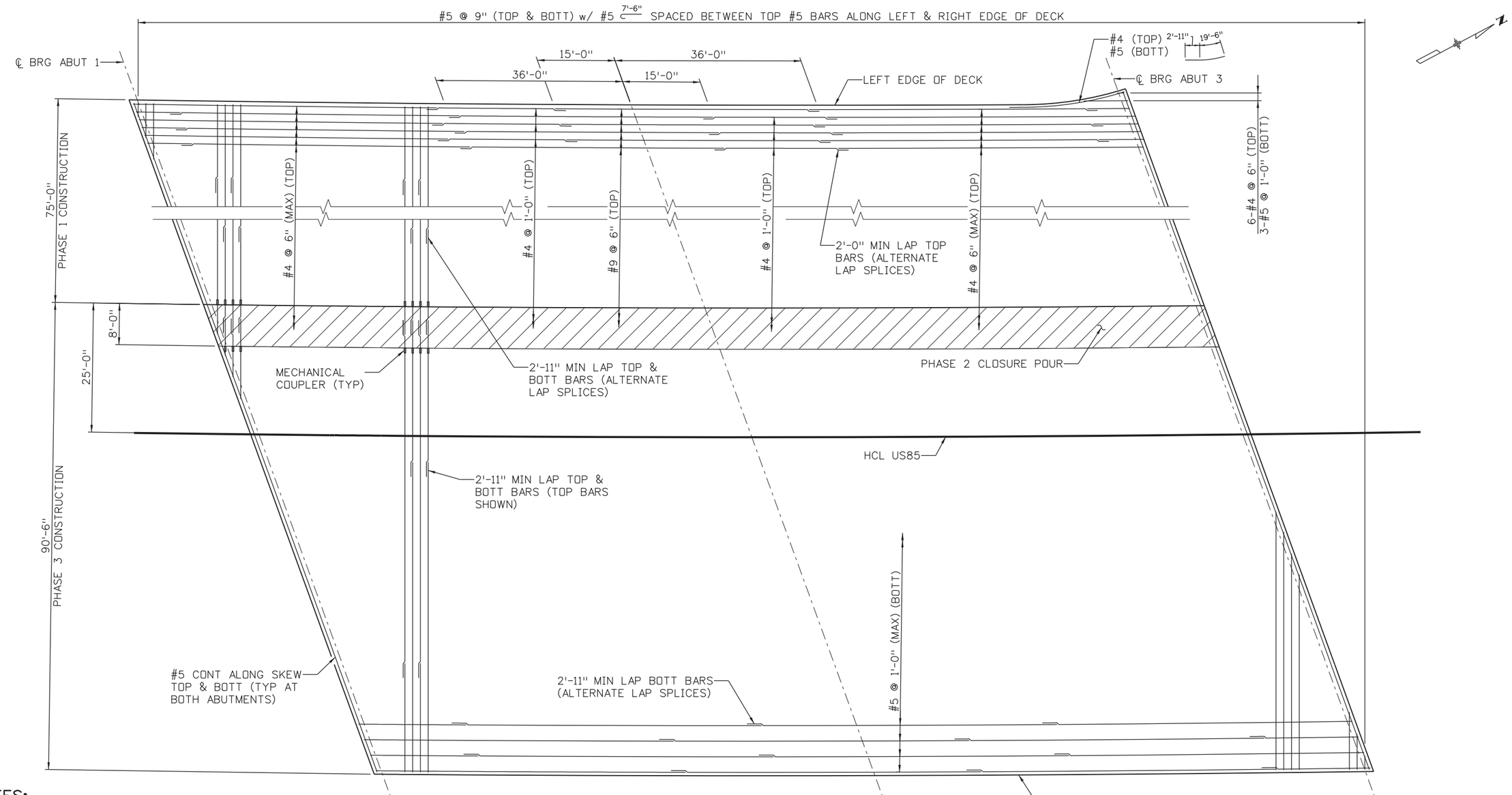

PLAN

NOTES:

1. LONGITUDINAL CONSTRUCTION JOINTS AT THE EDGE OF THE CONSTRUCTION PHASE IS PARALLEL TO THE HCL.
2. PLACE LONGITUDINAL BARS AT EDGE OF DECK PARALLEL TO THE EDGE OF DECK.
3. CONTRACTOR SHALL PLACE DECK CONCRETE WITHIN TWO HOURS OF PLACING DIAPHRAGM CONCRETE.
4. PERMANENT DECK FORMS ARE REQUIRED AND PRECAST DECK PANELS ARE NOT PERMITTED.
5. CONTRACTOR SHALL SUBMIT A DECK POURING SEQUENCE FOR APPROVAL BY THE ENGINEER.

Design	INITIAL	DATE	Detail	INITIAL	DATE	Quantities	INITIAL	DATE
Designed By	DRH	2/2019	Detailed By	KBK	2/2019	Quantities By	CMA	2/2019
Checked By	SPD	2/2019	Checked By	TLP	2/2019	Checked By	TLP	2/2019

pw:\\PWAPPOMA001:North Central_Omaha\Documents\200020\CDN009931\00000000025989 2\6.0_CAD_BIM\6.2_Work_In_Progress\NEPA Re-Eval Task\Bridge\Drawings\US85_NEPA_BRDG_Deck Reinforcing.dgn

DMADDOCK 2:51:02 PM

Print Date: 4/15/2021
File Name: US85_NEPA_BRDG_Deck Reinforcing.dgn
Horiz. Scale: 1:20 Vert. Scale: As Noted

HDR
1670 BROADWAY, SUITE 3400 DENVER, COLORADO 80202
Phone: 303-764-1520 FAX: 303-860-7139

Sheet Revisions		
Date:	Comments	Init.

DOUGLAS COUNTY COLORADO
Department of Public Works Phone: 303-660-7490
Engineering Division Fax: 303-660-9550
100 Third Street
Castle Rock, CO 80104

As Constructed
No Revisions:
Revised:
Void:

US 85 OVER C-470
DECK REINFORCING PLAN

Designer: D HOBBS
Detailer: KATHRINEBERG
Sheet Subset: BRIDGE
Structure Numbers: F-16-ICA
Subset Sheets: 30 of 47

Project No./Code
0852-114
23474
Sheet Number 286

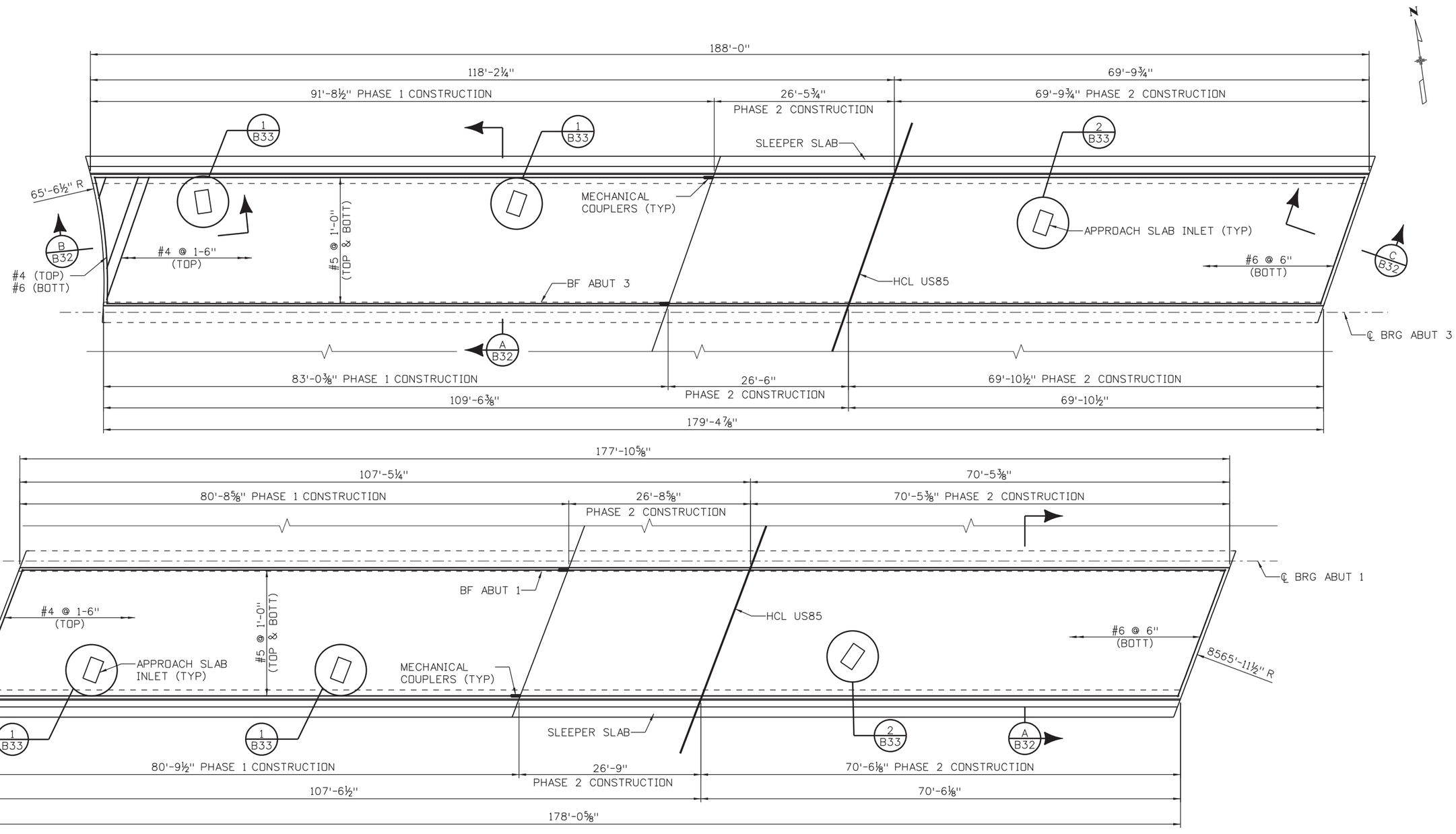

PLAN

Design			
	INITIAL	DATE	
Designed By	DRH	2/2019	Detailed By
Checked By	SPD	2/2019	Checked By

Detail			
	INITIAL	DATE	
Detailed By	KBK	2/2019	Quantities By
Checked By	TLP	2/2019	Checked By

Quantities		
	INITIAL	DATE
Quantities By	CMA	2/2019
Checked By	TLP	2/2019

DMADDOCK 2:51:04 PM pw:\\PWAPPDMA001:NorthCentral_Omaha\Documents\Z00020\CDN0099931\00000000025989 2\6.0_CAD_BIM\6.2_Work_In_Progress\NEPA Re-Eval Task\Bridge\Drawings\US85_NEPA_BRDG_ApproachSlab_1.dgn

Print Date: 4/15/2021
File Name: US85_NEPA_BRDG_ApproachSlab_1.dgn
Horiz. Scale: 1:15 Vert. Scale: As Noted

HDR
1670 BROADWAY, SUITE 3400 DENVER, COLORADO 80202
Phone: 303-764-1520 FAX: 303-860-7139

Sheet Revisions		
Date:	Comments	Init.

DOUGLAS COUNTY COLORADO
Department of Public Works Phone: 303-660-7490
Engineering Division Fax: 303-660-9550
100 Third Street
Castle Rock, CO 80104

As Constructed
No Revisions:
Revised:
Void:

US 85 OVER C-470
APPROACH SLAB
DETAILS (1 OF 2)

Designer:	D HOBBS	Structure Numbers	F-16-ICA
Detailer:	KATHRINEBERG		
Sheet Subset:	BRIDGE	Subset Sheets:	31 of 47

Project No./Code	
0852-114	
23474	
Sheet Number	287

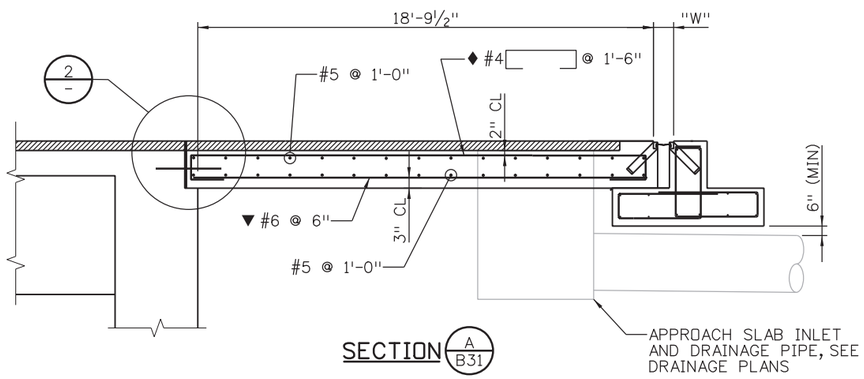

SECTION A/B31

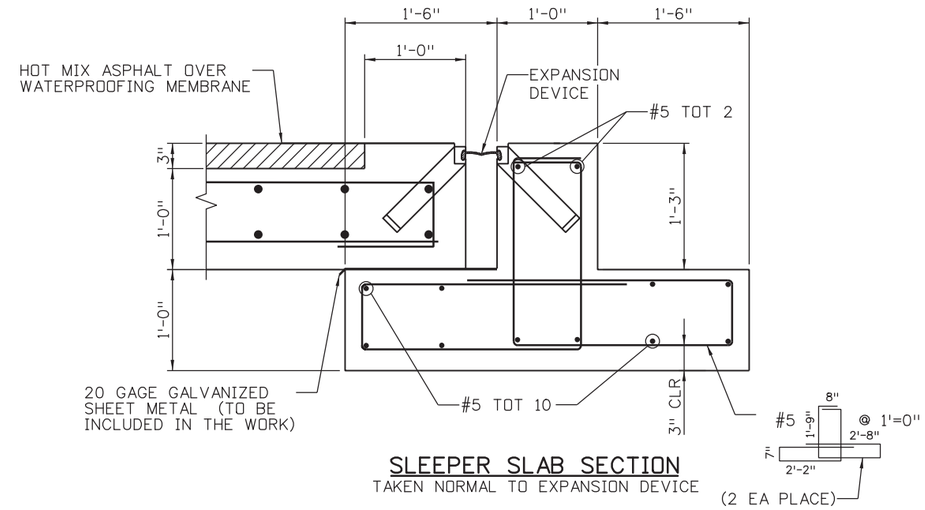

SLEEPER SLAB SECTION
TAKEN NORMAL TO EXPANSION DEVICE

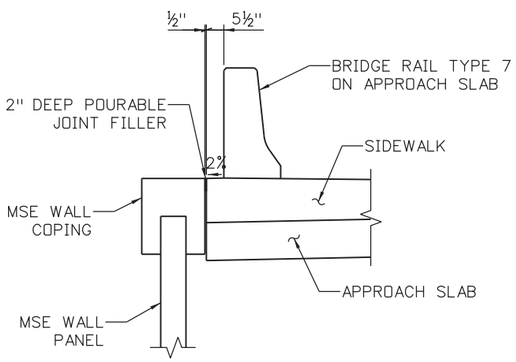

SECTION B/B31

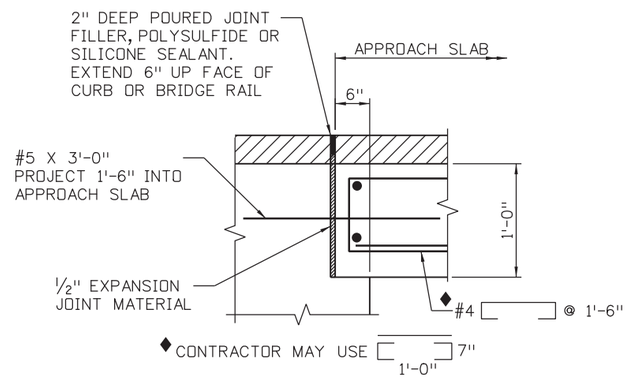

DETAIL 2/–

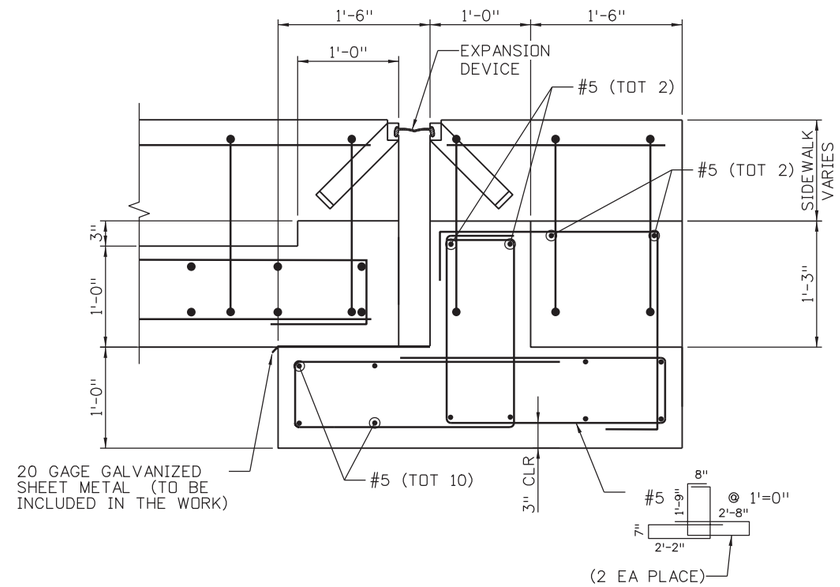

SLEEPER SLAB SECTION
TAKEN NORMAL TO EXPANSION DEVICE AT SIDEWALK

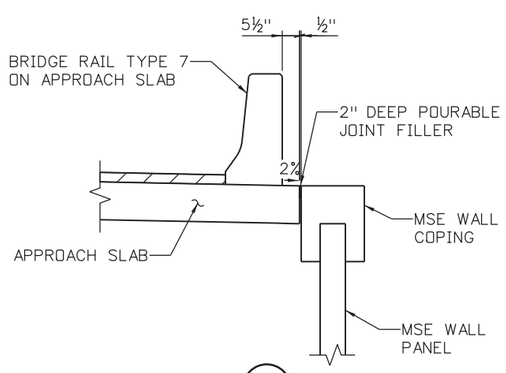

SECTION C/B31

NOTES:

1. CONCRETE CLASS D SHALL BE USED FOR APPROACH SLABS.
2. APPROACH SLAB CONCRETE SHALL BE CURED IN ACCORDANCE WITH THE SPECIFICATIONS FOR BRIDGE DECK CONCRETE IN SUBSECTION 601.
3. ½" EXPANSION JOINT MATERIAL SHALL MEET AASHTO SPEC. M213.

Design	INITIAL	DATE	Detail	INITIAL	DATE	Quantities	INITIAL	DATE
Designed By	DRH	2/2019	Detailed By	KBK	2/2019	Quantities By	CMA	2/2019
Checked By	SPG	2/2019	Checked By	TLP	2/2019	Checked By	TLP	2/2019

pw:\\PWAPPDMA001:North\Central_Omaha\Documents\200020\CN0009931\0000000002598921\6.0_CAD_BIM\6.2_Work_In_Progress\NEPA Re-Eval Task\Bridge\Drawings\US85_NEPA_BRDG_ApproachSlab_2.dgn

DMADDOCK 2:51:05 PM

Print Date: 4/15/2021
File Name: US85_NEPA_BRDG_ApproachSlab_2.dgn
Horiz. Scale: 1:1 Vert. Scale: As Noted

HDR
1670 BROADWAY, SUITE 3400 DENVER, COLORADO 80202
Phone: 303-764-1520 FAX: 303-860-7139

Sheet Revisions		
Date:	Comments	Init.

DOUGLAS COUNTY COLORADO
Department of Public Works Phone: 303-660-7490
Engineering Division Fax: 303-660-9550
100 Third Street
Castle Rock, CO 80104

As Constructed
No Revisions:
Revised:
Void:

US 85 OVER C-470
APPROACH SLAB
DETAILS (2 OF 2)

Designer:	D HOBBS	Structure Numbers	F-16-ICA
Detailer:	KATHRINEBERG		
Sheet Subset:	BRIDGE	Subset Sheets:	32 of 47

Project No./Code
0852-114
23474
Sheet Number 288

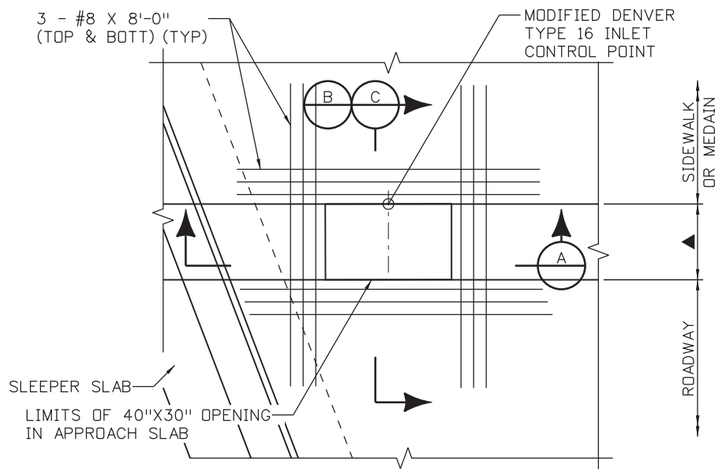

DETAIL 1/B31

▲ 2'-0" SHOULDER AT SIDEWALK
4'-0" SHOULDER AT MEDIAN

SOME LOCATIONS ARE OPPOSITE
HAND THAN SHOWN

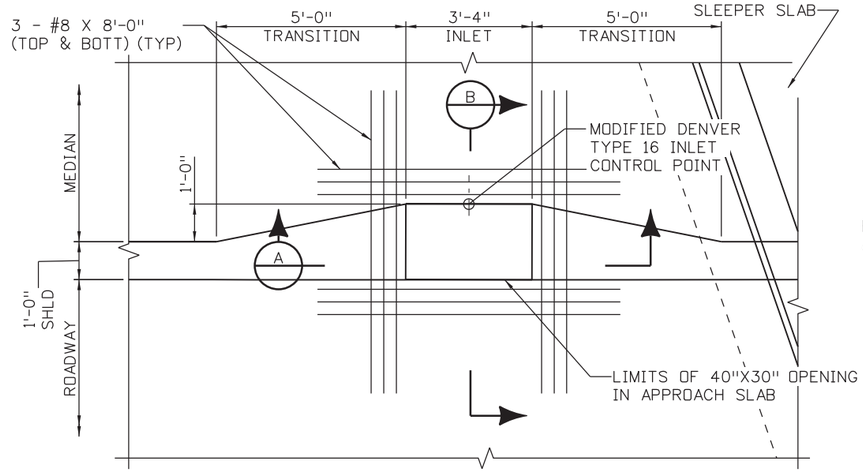

DETAIL 2/B31

SOME LOCATIONS ARE OPPOSITE
HAND THAN SHOWN

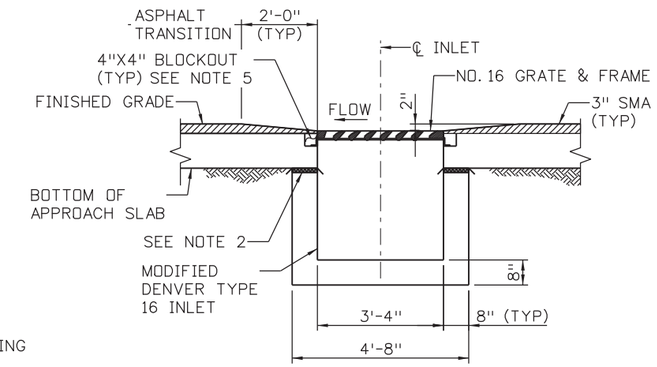

SECTION A

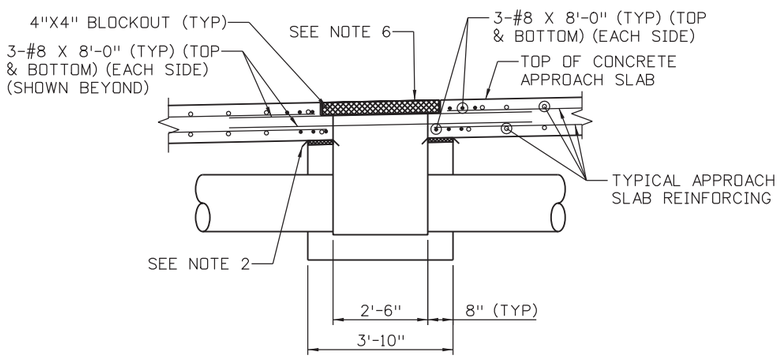

SECTION B C

DURING PHASED CONSTRUCTION
AT WEST MEDIAN

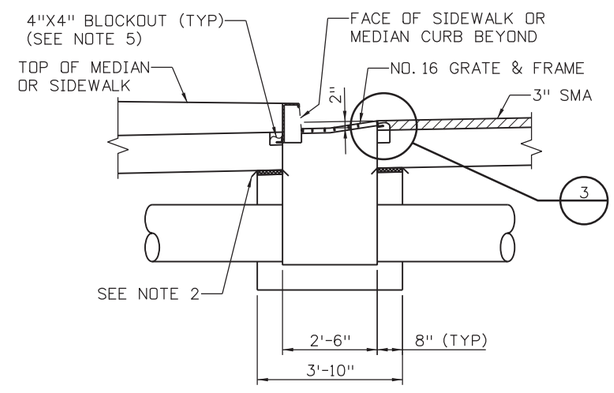

SECTION B

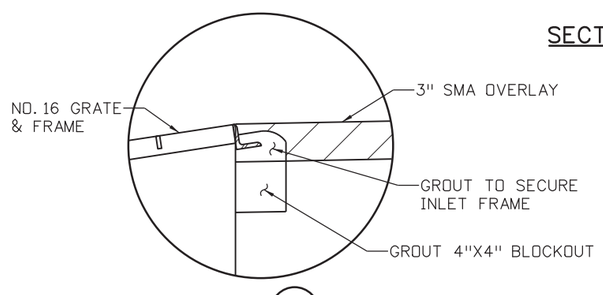

DETAIL 3

NOTES:

1. REFER TO CITY AND COUNTY OF DENVER SINGLE NUMBER 16 INLET (S-616.1) FOR NO. 16 GRATE & FRAME, DENVER TYPE 16 INLET, AND ANY OTHER DETAILS NOT SHOWN.
2. SECURE 1" POLYSTYRENE TO TOP OF INLET WALLS WITH CONSTRUCTION ADHESIVE. PROVIDE 20 GA. GALVANIZED SHEET METAL FLASHING AT TOP OF POLYSTYRENE. BEND EDGES OF FLASHING DOWN 2" TO ANCHOR. LUBRICATE SURFACE OF FLASHING WITH GREASE PRIOR TO PLACING APPROACH SLAB CONCRETE.
3. SHIFT OR CUT APPROACH SLAB REINFORCING WHERE REQUIRED TO ACCOMMODATE INLET.
4. SEE CONSTRUCTION LAYOUT FOR INLET LOCATIONS. SEE DRAINAGE PLANS FOR INLET AND DRAINAGE PIPE DETAILS AND INVERT ELEVATIONS.
5. USE A NON-SHRINK CEMENTITIOUS GROUT TO SET BEARING SEAT FOR INLET. FINISH GROUT LEVEL WITH TOP OF APPROACH SLAB CONCRETE. GROUT SHALL BE SELECTED FROM CDOT APPROVED PRODUCTS LIST.
6. CONTRACTOR SHALL PROVIDE AN HL-93 RATED REMOVABLE COVER FOR THE TYPE 16 INLET OPENING DURING PHASED CONSTRUCTION. CONTRACTOR SHALL SUBMIT COVER DETAILS TO THE ENGINEER FOR REVIEW PRIOR TO CONSTRUCTION. THE TOP OF THE TEMPORARY COVER SHALL BE RECESSED 1/4" (MIN) TO 3/4" (MAX) BELOW THE TOP OF APPROACH SLAB CONCRETE.
7. CONTRACTOR MAY SUBMIT ALTERNATE METHOD OF INSTALLING TYPE 16 INLET TO ACCOMMODATE PHASED CONSTRUCTION.

Design	INITIAL	DATE	Detail	INITIAL	DATE	Quantities	INITIAL	DATE
Designed By	DRH	2/2019	Detailed By	KBK	2/2019	Quantities By	CMA	2/2019
Checked By	SPD	2/2019	Checked By	TLP	2/2019	Checked By	TLP	2/2019

pw:\\PWAPPDMA001:North-Central_Omaha\Documents\200020\CdN009931\0000000002598992\6.0_CAD_BIM\6.2_Work_In_Progress\NEPA Re-Eval Task\Bridge\Drawings\US85_NEPA_BRDG_ApproachInlet.dgn

DMADDOCK 2:51:07 PM

Print Date: 4/15/2021
File Name: US85_NEPA_BRDG_ApproachInlet.dgn
Horiz. Scale: 1:1 Vert. Scale: As Noted

HDR 1670 BROADWAY, SUITE 3400 DENVER, COLORADO 80202
Phone: 303-764-1520 FAX: 303-860-7139

Sheet Revisions		
Date:	Comments	Init.

DOUGLAS COUNTY COLORADO
Department of Public Works Phone: 303-660-7490
Engineering Division Fax: 303-660-9550
100 Third Street
Castle Rock, CO 80104

As Constructed
No Revisions:
Revised:
Void:

US 85 OVER C-470
APPROACH SLAB INLET DETAILS

Designer: D HOBBS
Detailer: KATHRINEBERG
Sheet Subset: BRIDGE
Structure Numbers: F-16-ICA
Subset Sheets: 33 of 47

Project No./Code
0852-114
23474
Sheet Number 289

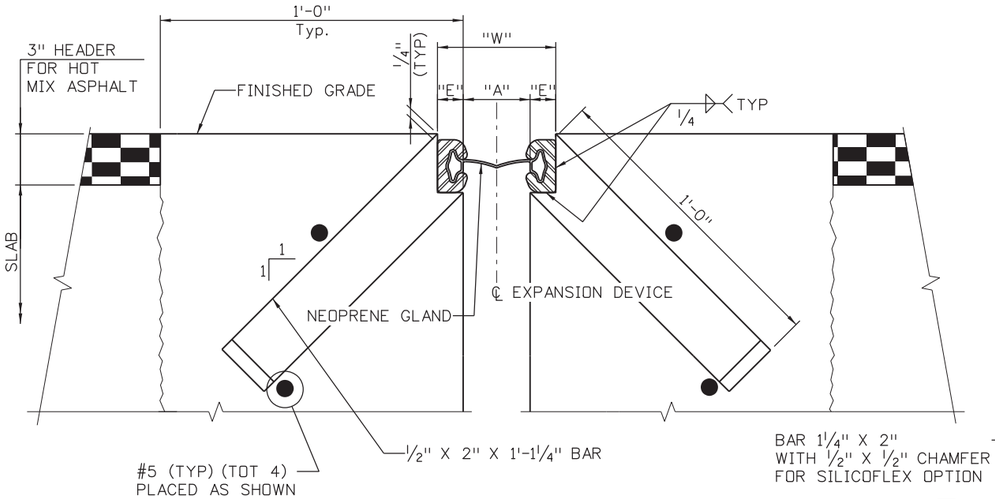

SECTION THRU STRIP SEAL BRIDGE EXPANSION DEVICE

SECTION TAKEN PERPENDICULAR TO ℄ EXP'N DEVICE

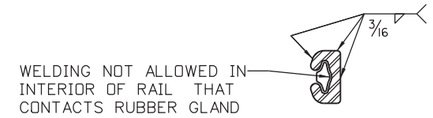

RAIL FIELD SPLICE DETAIL

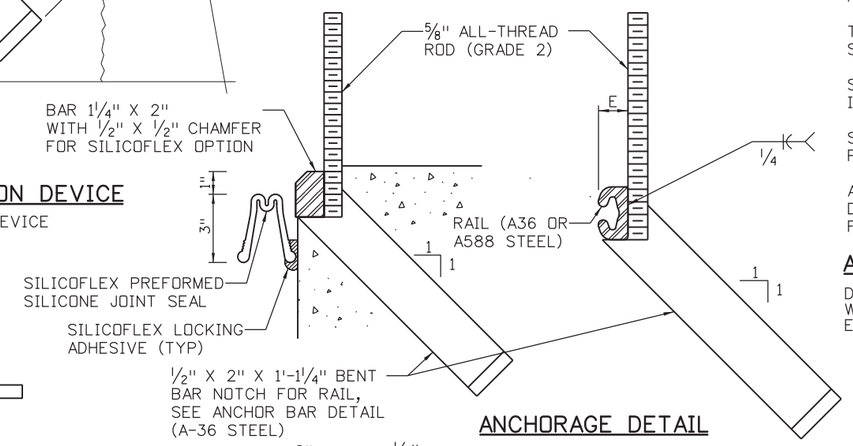

ANCHORAGE DETAIL

NOTES:

THE EXPANSION DEVICE SHALL BE INSTALLED ON GRADE, PARALLEL TO THE SLOPE AND GRADE OF THE DECK.

THE EXPANSION DEVICE SHALL NOT BE SET BEFORE THE DECK ELEVATIONS HAVE BEEN APPROVED BY THE ENGINEER. THE CONTRACTOR SHALL TAKE SHOTS OF THE EXPANSION DEVICE TO ACHIEVE THE REQUIRED ELEVATIONS FOR SMOOTHER RIDEABILITY ON BRIDGE APPROACHES.

AFTER THE CONCRETE HAS ATTAINED INITIAL SET, THE ATTACHMENTS USED TO HOLD THE EXPANSION DEVICE ASSEMBLY IN ITS PROPER POSITION SHALL BE REMOVED.

"W" AND "E" DIMENSIONS ARE DEPENDENT UPON THE PARTICULAR EXPANSION DEVICE SUPPLIED, AND SHALL BE SHOWN ON THE WORKING DRAWINGS.

SEE TABLE FOR DIMENSIONS "A" AND "W"; INTERPOLATE AS NEEDED. DO NOT INSTALL THE GLAND UNTIL DIMENSION "A" HAS OPENED UP TO AT LEAST 1 1/2" (2 1/2" FOR SILICOFLEX).

THE NEOPRENE GLAND SHALL BE INSTALLED IN ONE PIECE IN ACCORDANCE WITH SECTION 518 OF THE STANDARD SPECIFICATIONS.

SEE SECTION 518.09 IN THE STANDARD SPECIFICATIONS FOR WATER TIGHT INTEGRITY TESTING REQUIREMENTS.

SET ELEVATIONS AT TOP OF HEADER AND SLEEPER STEM WITH THE GRADE PROJECTION SCHEME.

ALL STEEL ELEMENTS (WHETHER GRADE A36 OR A588) OF THE BRIDGE EXPANSION DEVICE, INCLUDING COVER PLATES, SHALL BE HOT DIP GALVANIZED AFTER FABRICATION AS PER SECTION 509.11 OF THE STANDARD SPECIFICATIONS.

ACCEPTABLE EXPANSION DEVICE ALTERNATES

D.S. BROWN A2R400-SSA2
WABO SE400 TYPE A
E-POXY ENGINEERED MATERIALS S400-A STRIP SEAL

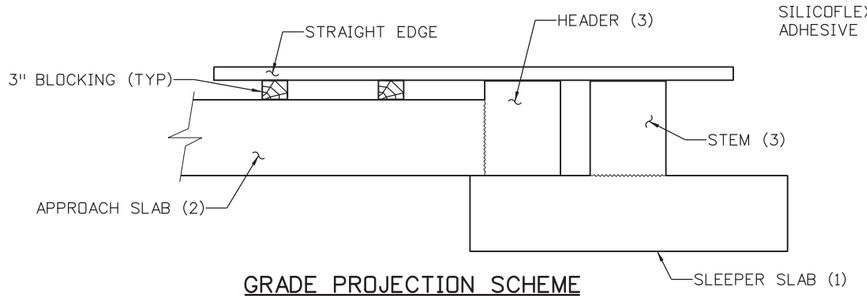

GRADE PROJECTION SCHEME

(NUMBERS IN PARENTHESIS REFER TO FIRST, SECOND AND THIRD CONCRETE POURS)

AIR TEMP	"A"	"W"*
30° F	2"	4 1/2"
40° F	2"	4 1/2"
50° F	1 7/8"	4 3/8"
60° F	1 7/8"	4 3/8"
70° F	1 3/4"	4 1/4"
80° F	1 5/8"	4 1/8"
90° F	1 5/8"	4 1/8"

*FOR E = 1 1/4" (MIN.)

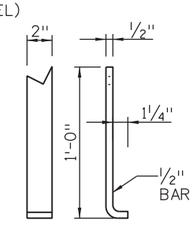

TYPICAL ANCHOR BAR DETAIL

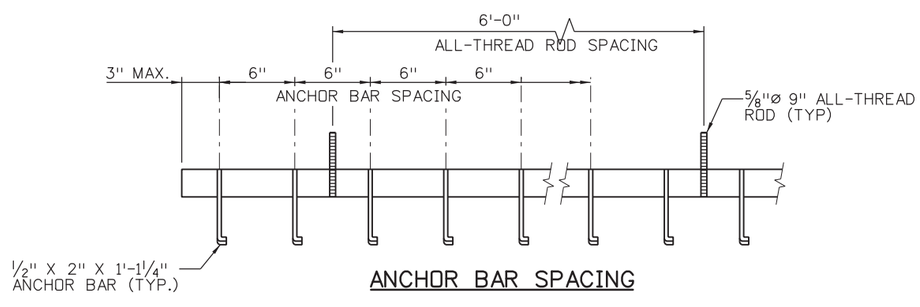

ANCHOR BAR SPACING

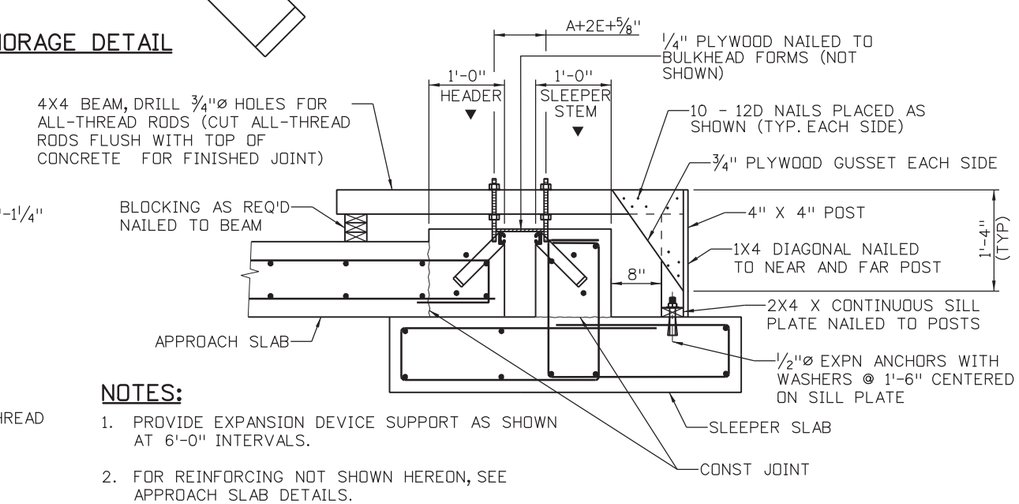

NOTES:

1. PROVIDE EXPANSION DEVICE SUPPORT AS SHOWN AT 6'-0" INTERVALS.
2. FOR REINFORCING NOT SHOWN HEREON, SEE APPROACH SLAB DETAILS.

▼CONCRETE SHALL BE PLACED AFTER EXPANSION DEVICE HAS BEEN ADJUSTED TO PROPER GRADE AND APPROVED BY THE ENGINEER USING THE GRADE PROJECTION SCHEME.

MINIMUM SUPPORT BRACKET REQUIREMENTS

Design	INITIAL	DATE	Detail	INITIAL	DATE	Quantities	INITIAL	DATE
Designed By	DRH	2/2019	Detailed By	KBK	2/2019	Quantities By	CMA	2/2019
Checked By	SPD	2/2019	Checked By	TLP	2/2019	Checked By	TLP	2/2019

pw:\\PWAPPDMA001:North Central_Omaha\Documents\200020\CDN0099931\0000000002598892\6.0_CAD_BIM\6.2_Work_In_Progress\NEPA Re-Eval Task\Bridge\Drawings\US85_NEPA_BRDGE_BridgeExpansion1.dgn

DMADDOCK 2:51:08 PM

Print Date: 4/15/2021
File Name: US85_NEPA_BRDGE_BridgeExpansion1.dgn
Horiz. Scale: 1:1 Vert. Scale: As Noted

HDR 1670 BROADWAY, SUITE 3400 DENVER, COLORADO 80202
Phone: 303-764-1520 FAX: 303-860-7139

Sheet Revisions		
Date:	Comments	Init.

DOUGLAS COUNTY COLORADO
Department of Public Works Phone: 303-660-7490
Engineering Division Fax: 303-660-9550
100 Third Street
Castle Rock, CO 80104

As Constructed
No Revisions:
Revised:
Void:

US 85 OVER C-470
BRDIGE EXPANSION DEVICE
(0 - 4 INCH) (1 OF 3)

Designer: D HOBBBS
Detailer: KATHRINEBERG
Structure Numbers: F-16-ICA
Sheet Subset: BRIDGE
Subset Sheets: 34 of 47

Project No./Code
0852-114
23474
Sheet Number 290

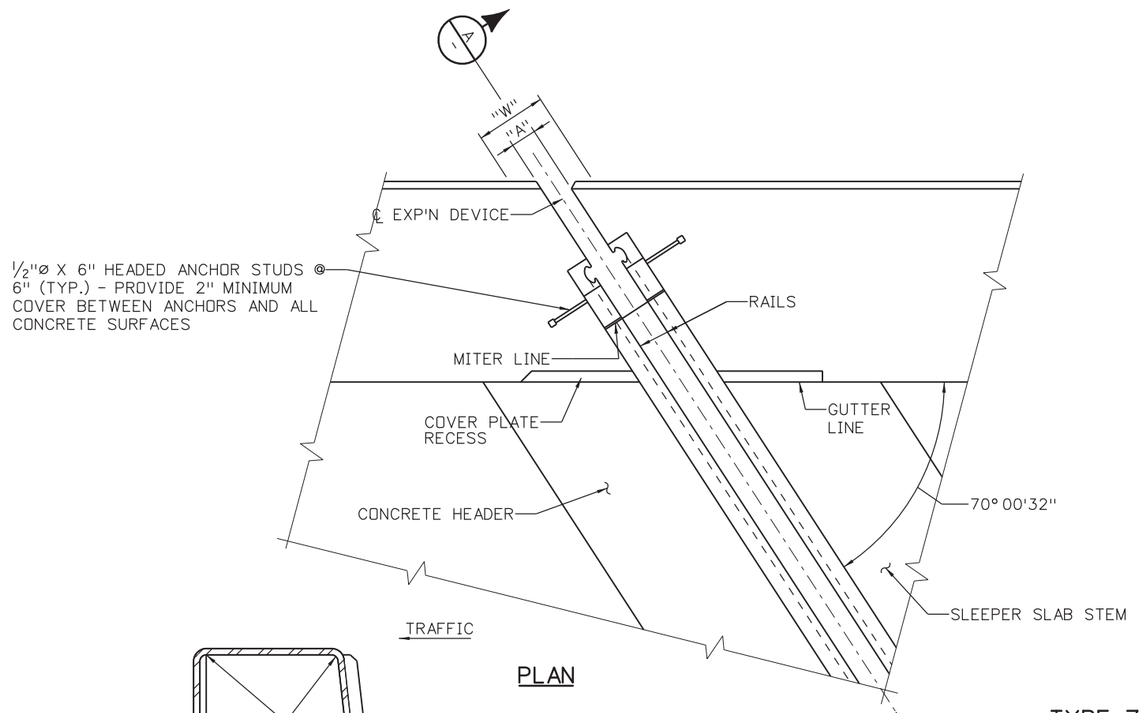

PLAN

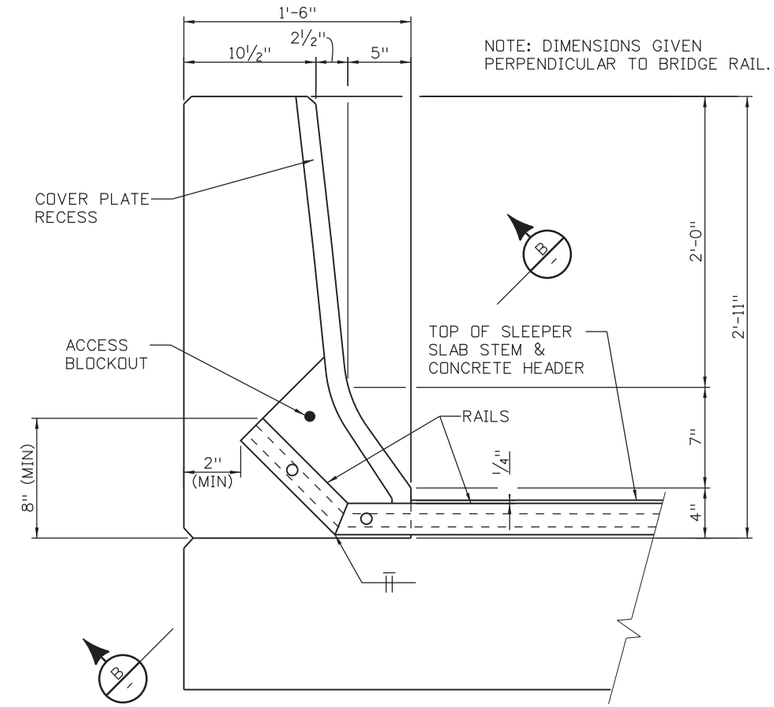

SECTION A

TYPE 7 RAIL DETAILS

(COVER PLATE NOT SHOWN FOR CLARITY)

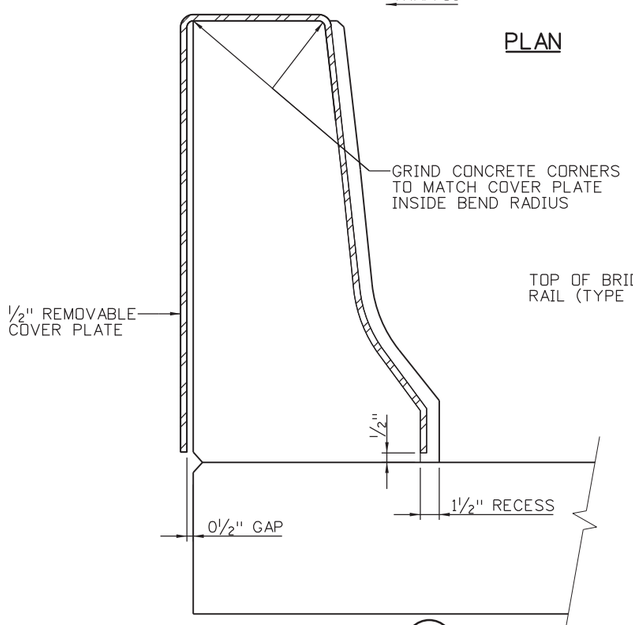

SECTION C

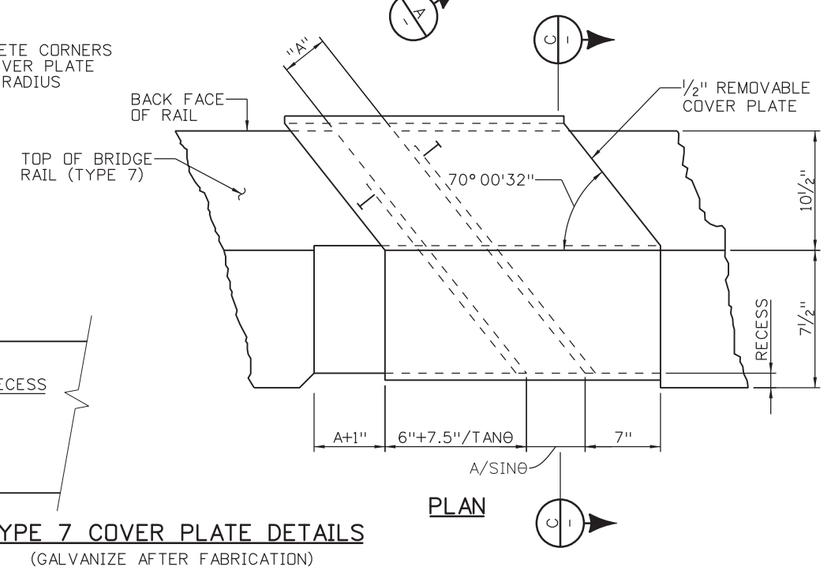

PLAN

TYPE 7 COVER PLATE DETAILS

(GALVANIZE AFTER FABRICATION)

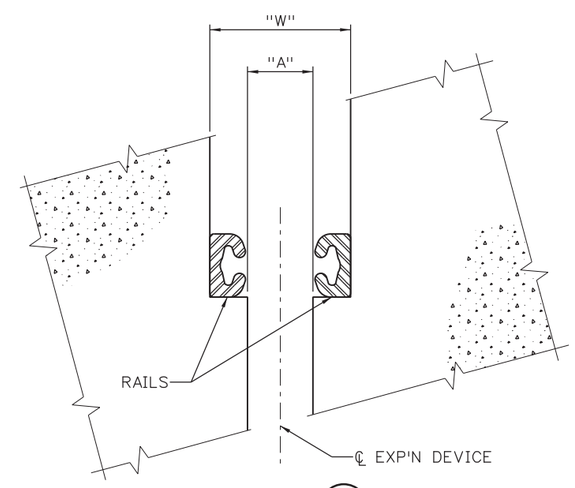

SECTION B

Quantities		
INITIAL	DATE	
CMA	2/2019	Quantities By
TLP	2/2019	Checked By

Detail		
INITIAL	DATE	
KBK	2/2019	Detailed By
TLP	2/2019	Checked By

Design		
INITIAL	DATE	
DRH	2/2019	Designed By
SPO	2/2019	Checked By

DMADDOCK 2:51:10 PM pw:\\PWAPPDMA001\NorthCentral_Omaha\Documents\200020\CDN059993\\00000000002598921\6.0_CAD_BIM\6.2_Work_In_Progress\NEPA Re-Eval Task\Bridge\Drawings\US85_NEPA_BRDGE_BridgeExpansion2.dgn

Print Date: 4/15/2021

File Name: US85_NEPA_BRDGE_BridgeExpansion2.dgn

Horiz. Scale: 1:1 Vert. Scale: As Noted

HDR
1670 BROADWAY, SUITE 3400 DENVER, COLORADO 80202
Phone: 303-764-1520 FAX: 303-860-7139

Sheet Revisions

Date:	Comments	Init.

DOUGLAS COUNTY COLORADO
Department of Public Works Phone: 303-660-7490
Engineering Division Fax: 303-660-9550
100 Third Street
Castle Rock, CO 80104

As Constructed

No Revisions:

Revised:

Void:

US 85 OVER C-470
BRIDGE EXPANSION DEVICE
(0 - 4 INCH) (2 OF 3)

Designer: D HOBBS
Detailer: KATHRINEBERG
Sheet Subset: BRIDGE
Structure Numbers: F-16-ICA
Subset Sheets: 35 of 47

Project No./Code

0852-114

23474

Sheet Number 291

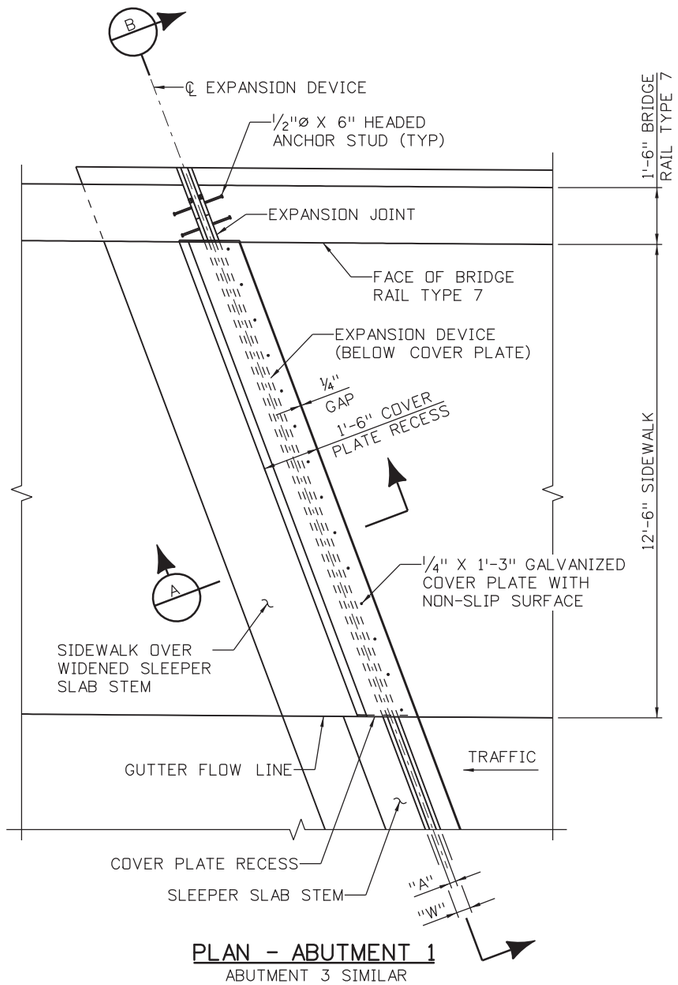

PLAN - ABUTMENT 1

ABUTMENT 3 SIMILAR

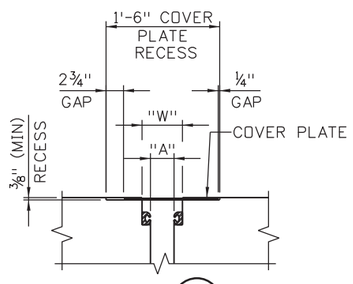

SECTION C

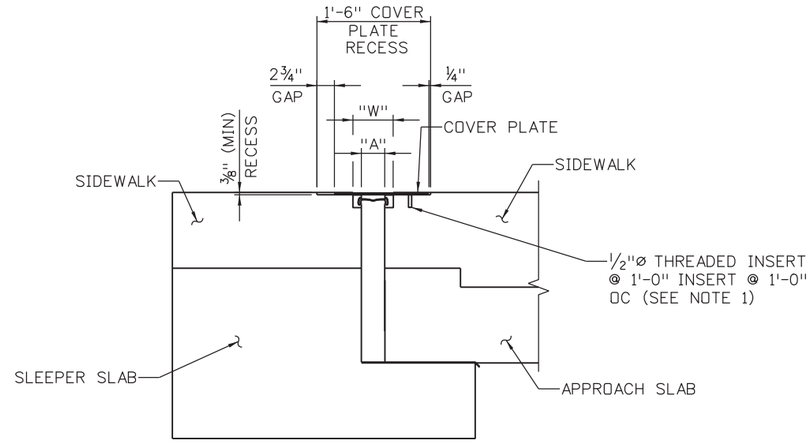

SECTION A

NOTES:

1. INSTALL THREADED INSERTS PER MANUFACTURER'S RECOMMENDATIONS. PROVIDE COUNTERSUNK SCREW HEADS IN COVER PLATE. THE COVER PLATE AND ALL ASSOCIATED HARDWARE SHALL BE GALVANIZED OR ZINC PLATED AFTER FABRICATION.
2. STEEL SIDEWALK COVER PLATES AND ALL ASSOCIATED HARDWARE AND LABOR WILL NOT BE PAID FOR SEPARATELY, BUT SHALL BE INCLUDED IN THE COST OF BRIDGE EXPANSION DEVICE (0-4 INCH).
3. PROVIDE ½" X 9" LONG RAIL ANCHOR BARS IN SIDEWALK. FOR SPACING, SEE DETAIL ON BRIDGE EXPANSION DEVICE (0-4 INCH) (1 OF 3)

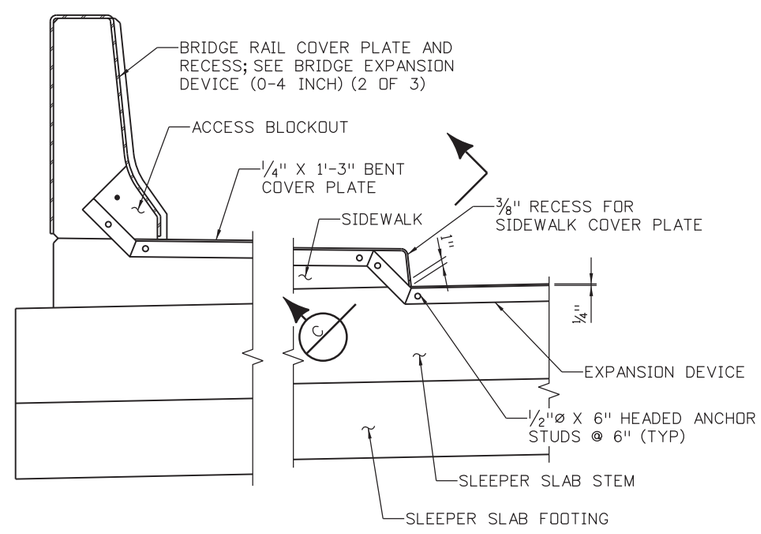

SECTION B

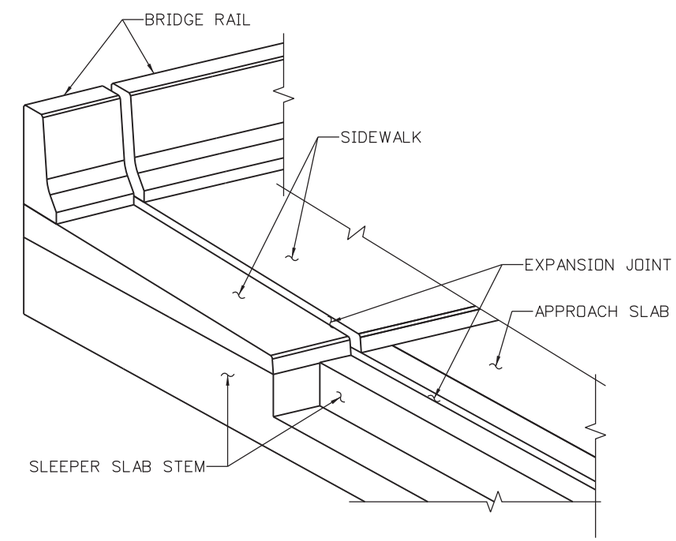

ISOMETRIC VIEW AT SIEWALK

Design			Detail			Quantities		
	INITIAL	DATE		INITIAL	DATE		INITIAL	DATE
Designed By	DRH	2/2019	Detailed By	KBK	2/2019	Quantities By	CMA	2/2019
Checked By	SPD	2/2019	Checked By	TLP	2/2019	Checked By	TLP	2/2019

DMADDOCK 2:51:12 PM pw:\\PWAPPDMA001:NorthCentral_Omaha\Documents\200020\CDN0099931\0000000025989 2\6.0_CAD_BIM\6.2_Work_In_Progress\NEPA Re-Eval Task\Bridge\Drawings\US85_NEPA_BRDGE_BridgeExpansion3.dgn

Print Date: 4/15/2021
File Name: US85_NEPA_BRDGE_BridgeExpansion3.dgn
Horiz. Scale: 1:1 Vert. Scale: As Noted

HDR
1670 BROADWAY, SUITE 3400 DENVER, COLORADO 80202
Phone: 303-764-1520 FAX: 303-860-7139

Sheet Revisions		
Date:	Comments	Init.

DOUGLAS COUNTY COLORADO
Department of Public Works Phone: 303-660-7490
Engineering Division Fax: 303-660-9550
100 Third Street
Castle Rock, CO 80104

As Constructed
No Revisions:
Revised:
Void:

US 85 OVER C-470
BRIDGE EXPANSION DEVICE
(0 - 4 INCH) (3 OF 3)

Designer:	D HOBBS	Structure Numbers	F-16-ICA
Detailer:	KATHRINEBERG		
Sheet Subset:	BRIDGE	Subset Sheets:	36 of 47

Project No./Code
0852-114
23474
Sheet Number 292

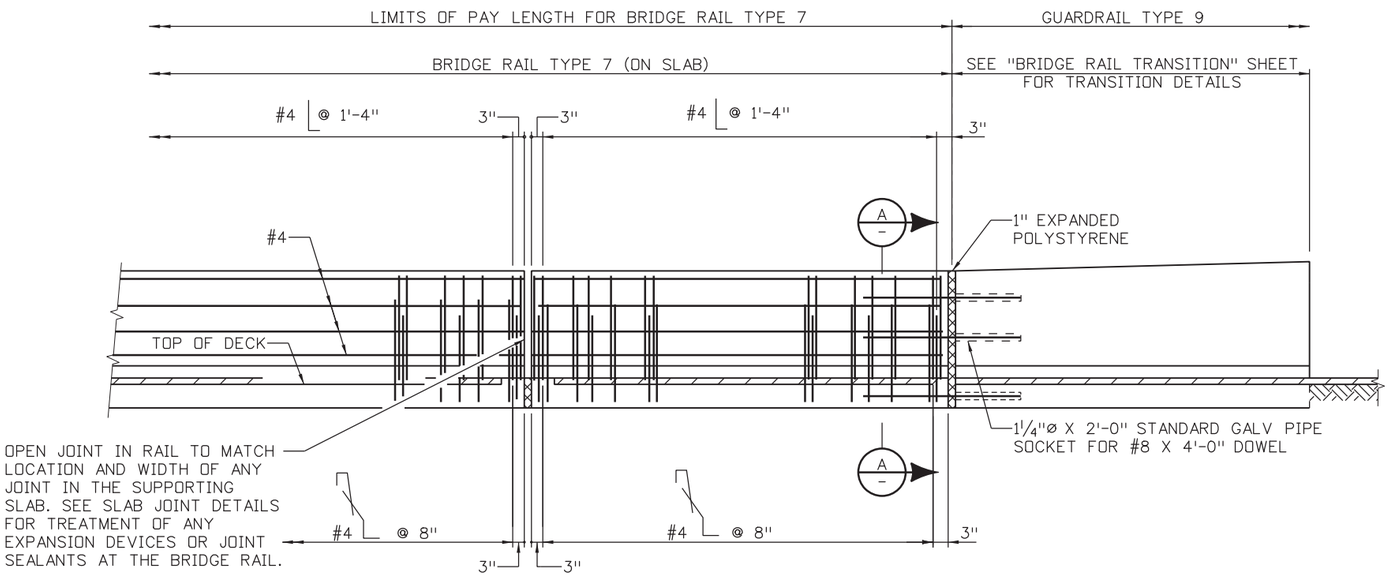

ELEVATION

TRANSITION TO CONNECT BRIDGE RAIL TYPE 7 TO GUARDRAIL TYPE 9

NOTES:

BACKFILL WINGWALLS AND RETAINING WALLS BEFORE BARRIER IS PLACED.

ALL BRIDGE RAIL CONCRETE SHALL BE CLASS D.

LONGITUDINAL REINFORCEMENT SHALL STOP AT ALL EXPANSION JOINTS.

BRIDGE RAIL SHALL BE CONSTRUCTED PLUMB.

CONCRETE AND REINFORCING STEEL SHALL CONFORM TO THE REQUIREMENTS OF SECTIONS 601 AND 602. PAYMENT WILL BE MADE UNDER ITEM 606, BRIDGE RAIL TYPE 7.

THE SURFACE OF THE RAIL SHALL BE TESTED WITH A 10 FOOT STRAIGHT EDGE LAID ALONG THE SURFACE IN THE LONGITUDINAL DIRECTION. DEVIATION OF THE CONCRETE SURFACE FROM THE STRAIGHT EDGE SHALL BE LESS THAN ¼" PLUS ALLOWANCE FOR ROADWAY HORIZONTAL AND VERTICAL CURVATURE, IF ANY.

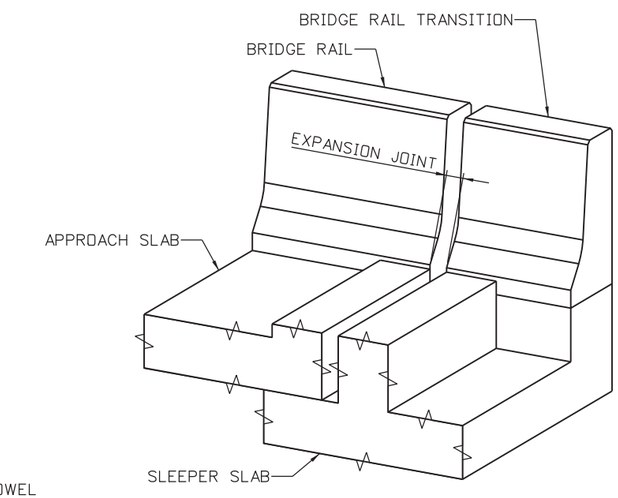

ISOMETRIC VIEW
(3" SMA NOT SHOWN FOR CLARITY)

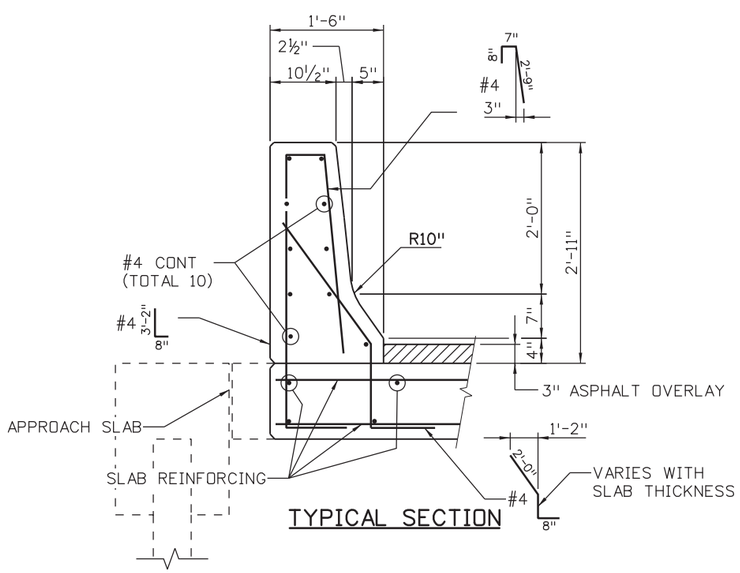

TYPICAL SECTION

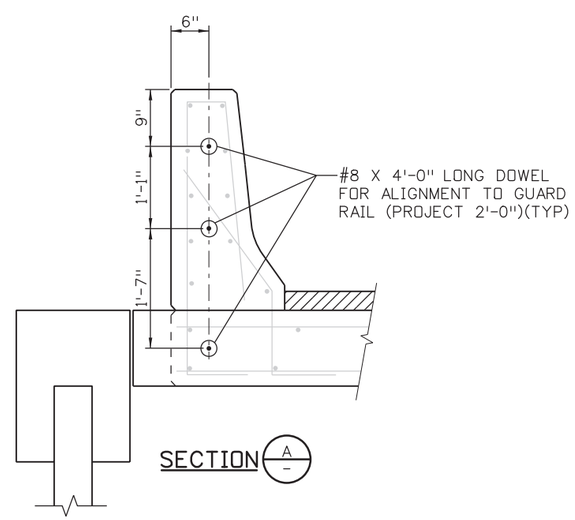

SECTION A

INFORMATION ONLY

DESCRIPTION	UNIT	PER LIN FT
CONCRETE CLASS D	CU YD	0.12
REINFORCING STEEL (EPOXY COATED)	LB	16.2

Design	INITIAL	DATE	Detail	INITIAL	DATE	Quantities	INITIAL	DATE
Designed By	DRH	2/2019	Detailed By	KBK	2/2019	Quantities By	CMA	2/2019
Checked By	SPD	2/2019	Checked By	TLP	2/2019	Checked By	TLP	2/2019

pw:\\PWAPPDMA001:North_Central_Omaha\Documents\200020\DN0039931\0000000002593892\6.0_CAD_BIM\6.2_Work_In_Progress\NEPA Re-Eval Task\Bridge\Drawings\US85_NEPA_BRDG_BridgeRail7.dgn

DMADDOCK 2:51:13 PM

Print Date: 4/15/2021
File Name: US85_NEPA_BRDG_BridgeRail7.dgn
Horiz. Scale: 1:1 Vert. Scale: As Noted

HDR
1670 BROADWAY, SUITE 3400 DENVER, COLORADO 80202
Phone: 303-764-1520 FAX: 303-860-7139

Sheet Revisions		
Date:	Comments	Init.

DOUGLAS COUNTY COLORADO
Department of Public Works
Engineering Division
100 Third Street
Castle Rock, CO 80104
Phone: 303-660-7490
Fax: 303-660-9550

As Constructed
No Revisions:
Revised:
Void:

US 85 OVER C-470
BRIDGE RAIL TYPE 7

Designer: D HOBBS
Detailer: KATHRINEBERG
Sheet Subset: BRIDGE
Structure Numbers: F-16-ICA
Subset Sheets: 37 of 47

Project No./Code
0852-114
23474
Sheet Number 293

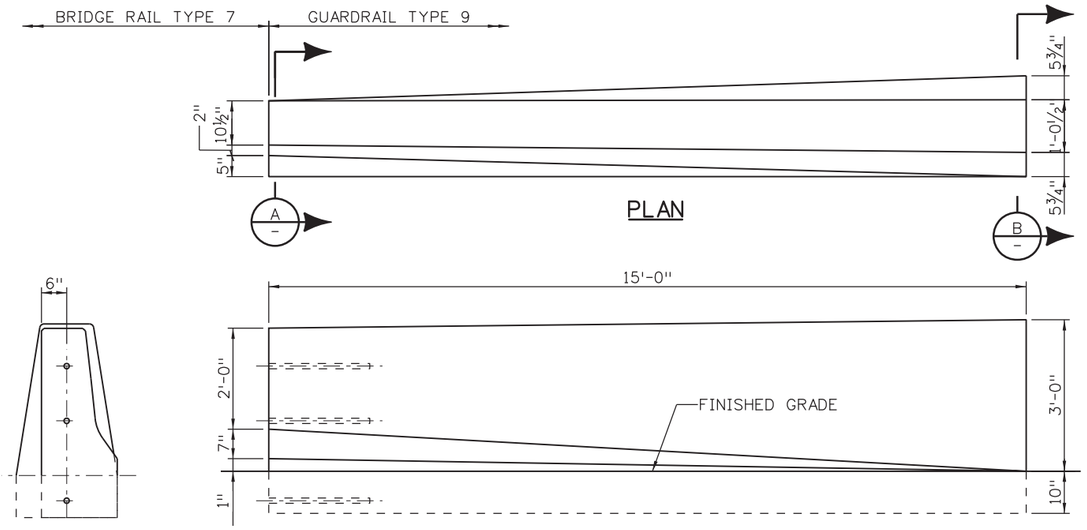

BRIDGE RAIL TYPE 7 TO GUARDRAIL TYPE 9 END TRANSITION

MEASURED AND PAID FOR AS GUARDRAIL TYPE 9.
SEE M-606-15 SHEET 2, TRANSITION DETAIL, FOR REINFORCEMENT INFORMATION.

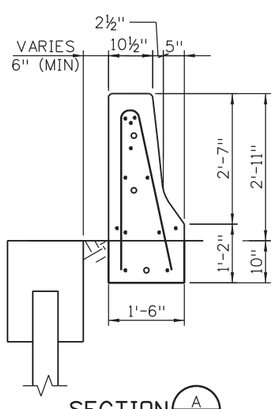

SECTION A

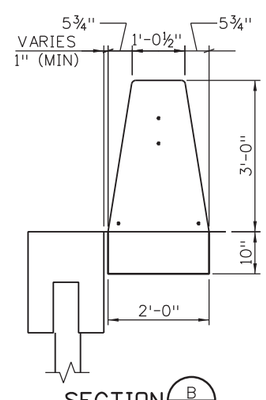

SECTION B

Design				Detail				Quantities		
	INITIAL	DATE		INITIAL	DATE			INITIAL	DATE
Designed By	DRH	2/2019	Detailed By	KBK	2/2019	Quantities By		CMA	2/2019
Checked By	SPD	2/2019	Checked By	TLP	2/2019	Checked By		TLP	2/2019

DMADDOCK 2:51:14 PM pw:\\PWAPPDMA001:NorthCentral_Omaha\Documents\200020\CDN\099931\00000000025989\2\6.0_CAD_BIM\6.2_Work_In_Progress\NEPA Re-Eval Task\Bridge\Drawings\US85_NEPA_BRDG_BridgeRail7_Transition.dgn

Print Date: 4/15/2021
File Name: US85_NEPA_BRDG_BridgeRail7_Transition.dgn
Horiz. Scale: 1:1 Vert. Scale: As Noted

HDR
1670 BROADWAY, SUITE 3400 DENVER, COLORADO 80202
Phone: 303-764-1520 FAX: 303-860-7139

Sheet Revisions		
Date:	Comments	Init.

DOUGLAS COUNTY COLORADO
Department of Public Works Phone: 303-660-7490
Engineering Division Fax: 303-660-9550
100 Third Street
Castle Rock, CO 80104

As Constructed
No Revisions:
Revised:
Void:

US 85 OVER C-470
BRIDGE RAIL TRANSITION

Designer: D HOBBS
Detailer: KATHRINEBERG
Sheet Subset: BRIDGE
Structure Numbers: F-16-ICA
Subset Sheets: 38 of 47

Project No./Code: 0852-114
23474
Sheet Number 294

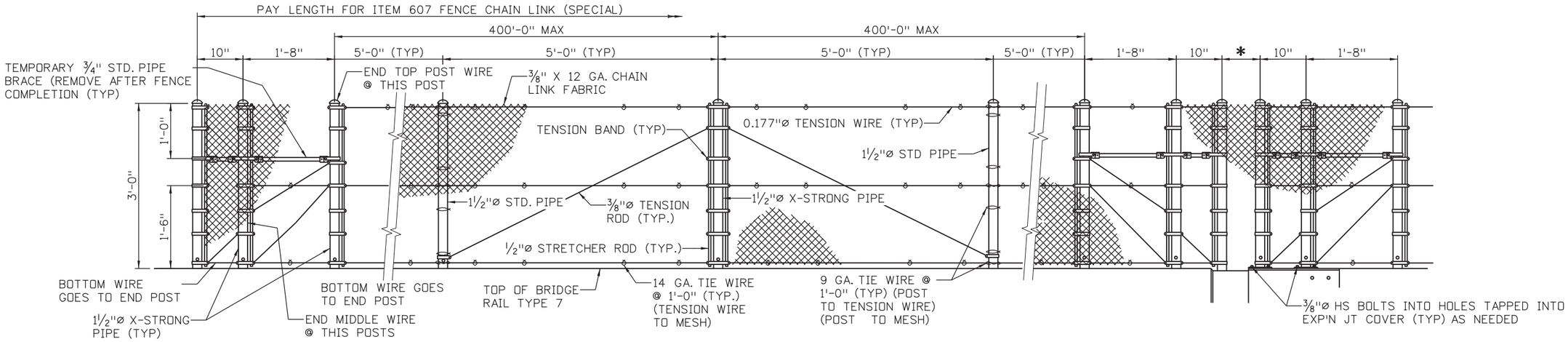

END POSTS | LINE POST | BRACE POST (SPA @ 400' MAX.) | LINE POST | END POSTS AT EXPANSION DEVICE

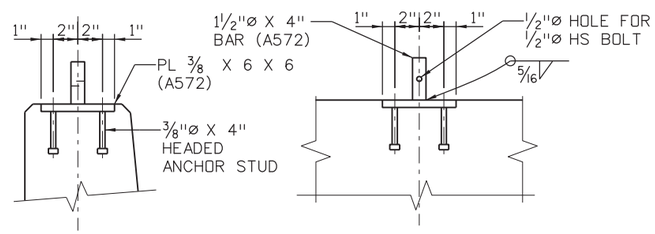

SECTION | ELEVATION

* FOR CONCRETE BRIDGES:
USE ¼ OF RATED JOINT MOTION +6", 8" MIN. IF NOT KNOWN, RATED MOTION MAY BE ASSUMED TO BE 1¼" PER 100' CONTRIBUTING TO MOTION.
IF * EXCEEDS 10" RUN MESH OVER GAP WITH ENOUGH SLACK FOR ½ OF RATED EXPANSION MOTION.

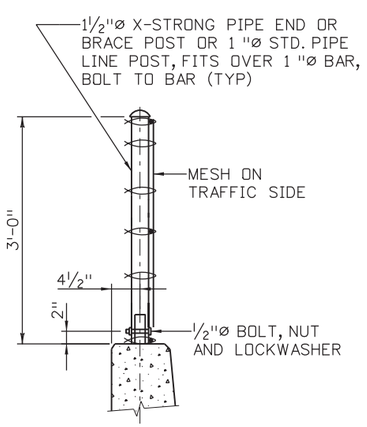

TYPICAL SECTION

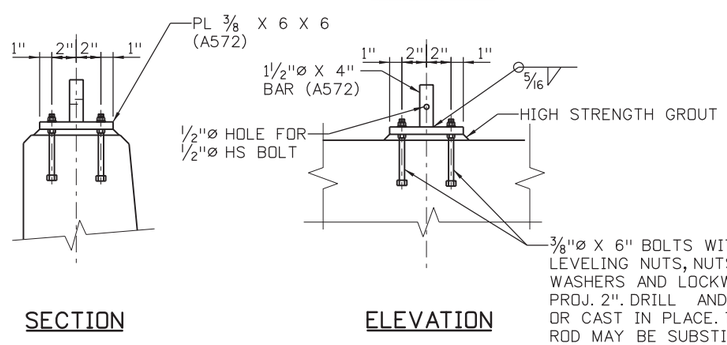

SECTION | ELEVATION

ALTERNATE ANCHORAGE DETAILS

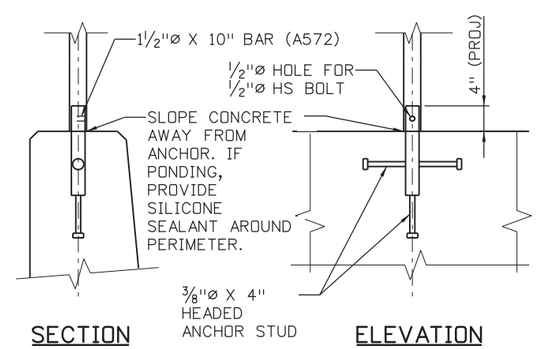

SECTION | ELEVATION

ANCHORAGE DETAIL

NOTES

ANCHORAGE ASSEMBLY SHALL BE GALVANIZED AFTER FABRICATION. IF VINYL COATING IS SPECIFIED, THE FENCE ASSEMBLY SHALL BE GALVANIZED AND VINYL COATED AFTER FABRICATION.
ANCHORAGES SHALL ONLY BE GALVANIZED AFTER FABRICATION.

TENSION RODS AND WIRES SHALL HAVE TURNBUCKLES.

POST SHALL BE VERTICAL.

PIPE SHALL CONFORM TO ASTM A53 TYPE E OR S, GRADE B.

DESIGN DATA

TEST TENSION = 5400 LBS
TEST WITH: MAX MIDBAY DEFLECTION = 1¼" FOR LATERAL LOAD OF 160 LBS. ON 1 SQ FT. 1'-6" UP @ CENTER OF BAY.

LIVE LOAD: WIND LOAD = 32 PSF
OR SNOW IMPACT LOAD = 96 PLF @ 1'-6" UP

STRUCTURAL STEEL: PIPE F_Y = 35,000 PSI
ASTM A572 (GR 50) F_Y = 50,000 PSI

STANDARD COLOR VINYL COATINGS OVER GALVANIZED WIRE	MUNSELL COLOR SYSTEM NO. (AS PER ASTM)
☒ GALVANIZED ONLY	NONE
BROWN	7YR 2.4/1.75
GREEN	8.8G 2.63/5.8
BLACK	1.8PB 1.26/0.5

IF THE SPECIFIC COLOR OF COATING IS NOT MARKED AND THE FEDERAL COLOR NO. OR THE MUNSELL COLOR SYSTEM NO. IS NOT GIVEN, VINYL COATING IS NOT REQUIRED.

Design	INITIAL	DATE	Detail	INITIAL	DATE	Quantities	INITIAL	DATE
Designed By	DRH	2/2019	Detailed By	KBK	2/2019	Quantities By	CMA	2/2019
Checked By	SPD	2/2019	Checked By	TLP	2/2019	Checked By	TLP	2/2019

DMADDOCK 2:51:16 PM pw:\\PWAPPDMA001:NorthCentral_Omaha\Documents\200020\CON0999931\0000000002598932\6.0_CAD_BIM\6.2_Work_In_Progress\NEPA Re-Eval Task\Bridge\Drawings\US85_NEPA_BRDG_FenceChainLinkSpecial.dgn

Print Date: 4/15/2021
File Name: US85_NEPA_BRDG_FenceChainLinkSpecial.dgn
Horiz. Scale: 1:1 Vert. Scale: As Noted

HDR 1670 BROADWAY, SUITE 3400 DENVER, COLORADO 80202
Phone: 303-764-1520 FAX: 303-860-7139

Sheet Revisions		
Date:	Comments	Init.

DOUGLAS COUNTY COLORADO
Department of Public Works Phone: 303-660-7490
Engineering Division Fax: 303-660-9550
100 Third Street
Castle Rock, CO 80104

As Constructed
No Revisions:
Revised:
Void:

US 85 OVER C-470
FENCE CHAIN LINK
(36 INCH)

Designer: D HOBBS
Detailer: KATHRINEBERG
Structure Numbers: F-16-ICA
Sheet Subset: BRIDGE
Subset Sheets: 39 of 47

Project No./Code
0852-114
23474
Sheet Number 295

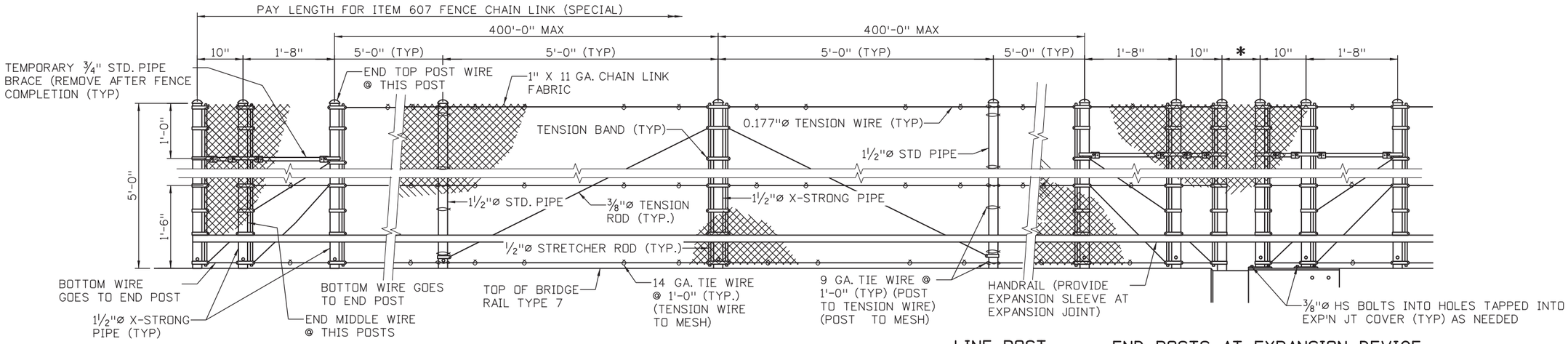

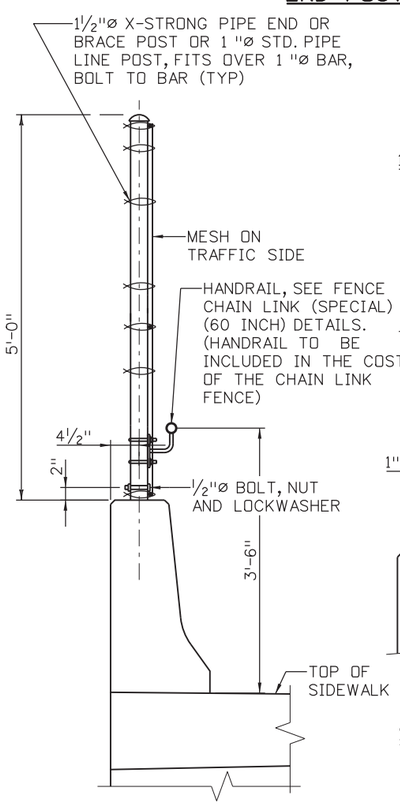

TYPICAL SECTION

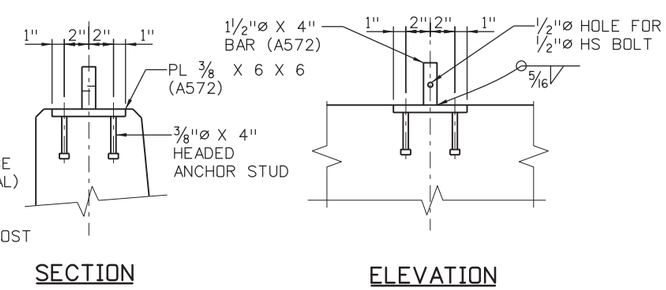

SECTION ELEVATION

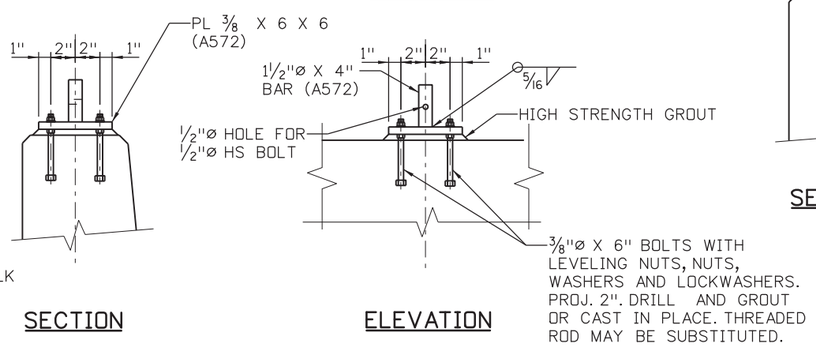

SECTION ELEVATION

ALTERNATE ANCHORAGE DETAILS

* FOR CONCRETE BRIDGES:
USE ¼ OF RATED JOINT MOTION +6", 8" MIN. IF NOT KNOWN, RATED MOTION MAY BE ASSUMED TO BE 1¼" PER 100' CONTRIBUTING TO MOTION.
IF * EXCEEDS 10" RUN MESH OVER GAP WITH ENOUGH SLACK FOR ½ OF RATED EXPANSION MOTION.

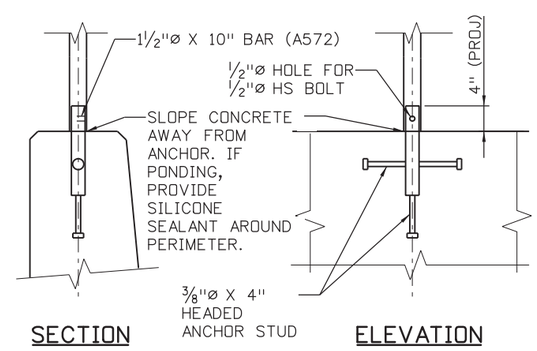

SECTION ELEVATION

ANCHORAGE DETAIL

NOTES

ANCHORAGE ASSEMBLY SHALL BE GALVANIZED AFTER FABRICATION. IF VINYL COATING IS SPECIFIED, THE FENCE ASSEMBLY SHALL BE GALVANIZED AND VINYL COATED AFTER FABRICATION.
ANCHORAGES SHALL ONLY BE GALVANIZED AFTER FABRICATION.

TENSION RODS AND WIRES SHALL HAVE TURNBUCKLES.

POST SHALL BE VERTICAL.

PIPE SHALL CONFORM TO ASTM A53 TYPE E OR S, GRADE B.

DESIGN DATA

TEST TENSION = 5400 LBS
TEST WITH: MAX MIDBAY DEFLECTION = 1¼" FOR LATERAL LOAD OF 160 LBS. ON 1 SQ FT. 1'-6" UP @ CENTER OF BAY.

LIVE LOAD: WIND LOAD = 32 PSF
OR SNOW IMPACT LOAD = 96 PLF @ 1'-6" UP

STRUCTURAL STEEL: PIPE F_Y = 35,000 PSI
ASTM A572 (GR 50) F_Y = 50,000 PSI

STANDARD COLOR VINYL COATINGS OVER GALVANIZED WIRE	MUNSELL COLOR SYSTEM NO. (AS PER ASTM)
☒ GALVANIZED ONLY	NONE
BROWN	7YR 2.4/1.75
GREEN	8.8G 2.63/5.8
BLACK	1.8PB 1.26/0.5

IF THE SPECIFIC COLOR OF COATING IS NOT MARKED AND THE FEDERAL COLOR NO. OR THE MUNSELL COLOR SYSTEM NO. IS NOT GIVEN, VINYL COATING IS NOT REQUIRED.

Design	INITIAL	DATE	Detail	INITIAL	DATE	Quantities	INITIAL	DATE
Designed By	.	.	Detailed By	.	.	Quantities By	.	.
Checked By	.	.	Checked By	.	.	Checked By	.	.

pw:\\PWAPPDMA001NorthCentral_Omaha\Documents\200020\CDN0099931\00000000002598932\6.0_CAD_BIM\6.2_Work_In_Progress\NEPA Re-Eval Task\Bridge\Drawings\US85_NEPA_BRDG_FenceChainLink60inch.dgn

DMADDOCK 2:51:17 PM

Print Date: 4/15/2021
File Name: US85_NEPA_BRDG_FenceChainLink60inch.dgn
Horiz. Scale: 1:1 Vert. Scale: As Noted

HDR 1670 BROADWAY, SUITE 3400 DENVER, COLORADO 80202
Phone: 303-764-1520 FAX: 303-860-7139

Sheet Revisions		
Date:	Comments	Init.
.		.
.		.
.		.
.		.

DOUGLAS COUNTY COLORADO
Department of Public Works Phone: 303-660-7490
Engineering Division Fax: 303-660-9550
100 Third Street
Castle Rock, CO 80104

As Constructed
No Revisions:
Revised:
Void:

US 85 OVER C-470
FENCE CHAIN LINK (SPECIAL)
(60 INCH)

Designer: D HOBBS
Detailer: KATHRINEBERG
Sheet Subset: BRIDGE
Structure Numbers: F-16-ICA
Subset Sheets: 40 of 47

Project No./Code
0852-114
23474
Sheet Number 296

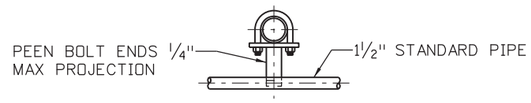

PLAN

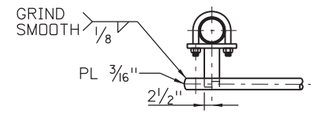

PLAN

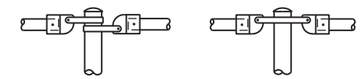

ALTERNATE DETAILS

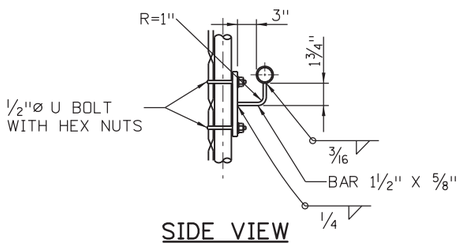

SIDE VIEW

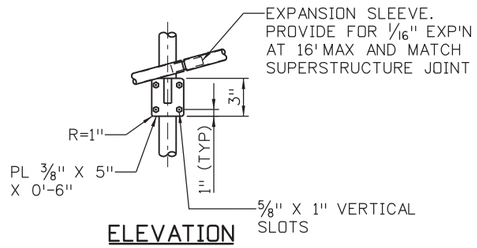

ELEVATION

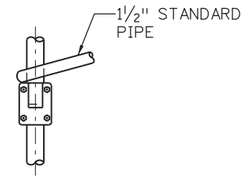

ELEVATION

HANDRAIL DETAILS
(@ VERTICAL POST)

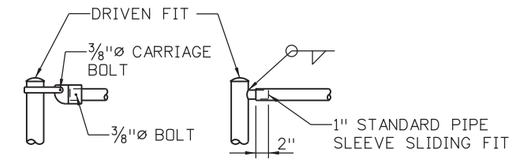

TYPICAL CONNECTION DETAILS

Design			Detail			Quantities		
	INITIAL	DATE		INITIAL	DATE		INITIAL	DATE
Designed By	DRH	2/2019	Detailed By	KBK	2/2019	Quantities By	CMA	2/2019
Checked By	SPD	2/2019	Checked By	TLP	2/2019	Checked By	TLP	2/2019

pw:\\PWAPPDMA001:North_Central_Omaha\Documents\200020\CDN009991\0000000000259892\6.0_CAD_BIM\6.2_Work_In_Progress\NEPA Re-Eval Task\Bridge\Drawings\US85_NEPA_BRDG_FenceChainLinkDetails).dgn

DMADDOCK 2:51:19 PM

Print Date: 4/15/2021
File Name: US85_NEPA_BRDG_FenceChainLinkDetails).dgn
Horiz. Scale: 1:1 Vert. Scale: As Noted

HDR
1670 BROADWAY, SUITE 3400 DENVER, COLORADO 80202
Phone: 303-764-1520 FAX: 303-860-7139

Sheet Revisions		
Date:	Comments	Init.

DOUGLAS COUNTY COLORADO
Department of Public Works Phone: 303-660-7490
Engineering Division Fax: 303-660-9550
100 Third Street
Castle Rock, CO 80104

As Constructed
No Revisions:
Revised:
Void:

US 85 OVER C-470
FENCE CHAIN LINK (SPECIAL)
(60 INCH) DETAILS

Designer: HOBBS
Detailer: KATHRINEBERG
Sheet Subset: BRIDGE
Structure Numbers: F-16-ICA
Subset Sheets: 41 of 47

Project No./Code
0852-114
23474
Sheet Number 297

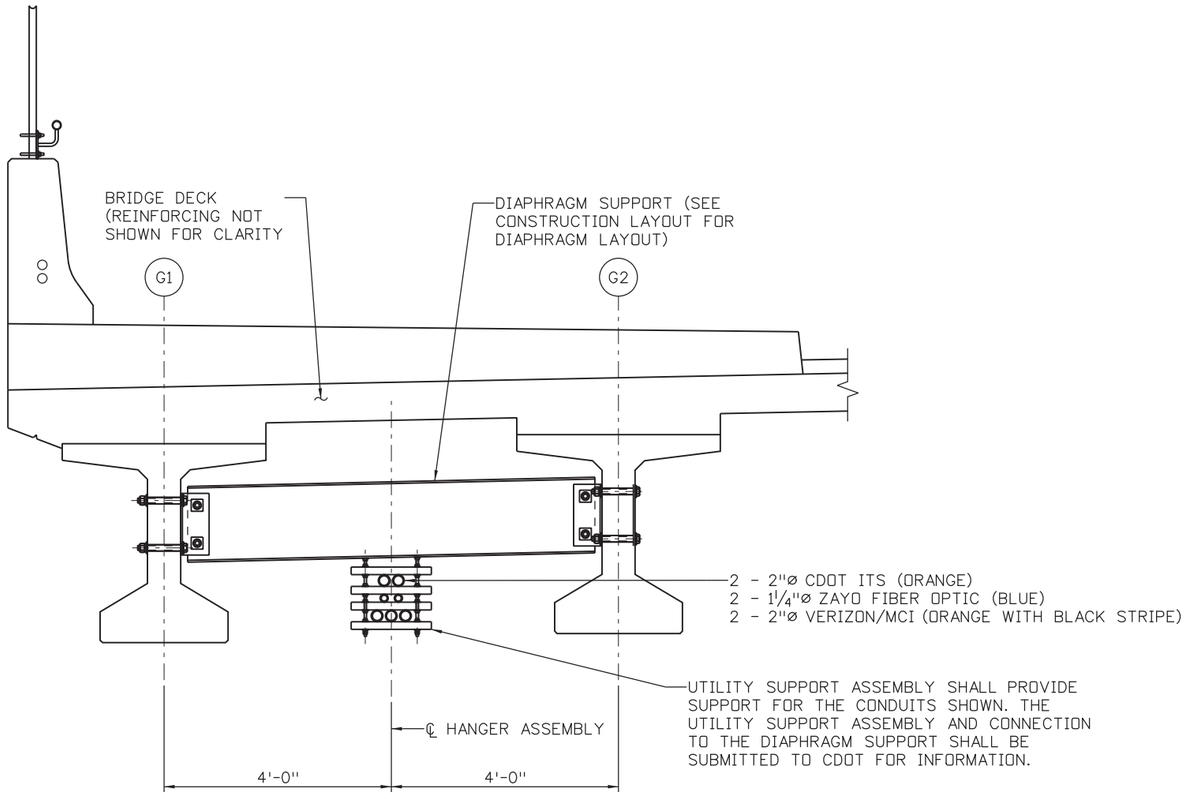

UTILITY SUPPORT DETAIL

(LOOKING AHEAD STATION)

NOTES:

1. MATERIAL AND LABOR FOR INSTALLATION SHALL NOT BE PAID FOR SEPARATELY, BUT SHALL BE INCLUDED IN THE COST OF CONCRETE CLASS D (BRIDGE).

2. THE CONDUIT, EXPANSION DEVICES AND ANY OTHER HARDWARE SHALL BE DESIGNED AND DETAILED BY THE CONTRACTOR. THE CONTRACTOR SHALL COORDINATE THE REQUIRED SUPPORT SPACING FOR THE CONDUIT. IF THE CONDUIT SUPPORT SPACING SHOWN IN THE CONSTRUCTION LAYOUT REQUIRES ADJUSTMENT, THE REVISED SPACING SHALL BE SUBMITTED TO CDOT FOR REVIEW.

Design	INITIAL	DATE	Detail	INITIAL	DATE	Quantities	INITIAL	DATE
Designed By	DRH	2/2019	Detailed By	KBK	2/2019	Quantities By	CMA	2/2019
Checked By	SPG	2/2019	Checked By	TLP	2/2019	Checked By	TLP	2/2019

pw:\\PWAPPDMA001:NorthCentral_Omaha\Documents\Y200020\CONN0099931\0000000000259892\6.0_CAD_BIM\6.2_Work_In_Progress\NEPA Re-Eval Task\Bridge\Drawings\US85_NEPA_BRDG_MiscDetails.dgn

DMADDOCK 2:51:20 PM

Print Date: 4/15/2021
File Name: US85_NEPA_BRDG_MiscDetails.dgn
Horiz. Scale: 1:1 Vert. Scale: As Noted

HDR
1670 BROADWAY, SUITE 3400 DENVER, COLORADO 80202
Phone: 303-764-1520 FAX: 303-860-7139

Sheet Revisions		
Date:	Comments	Init.

DOUGLAS COUNTY
COLORADO
Department of Public Works Phone: 303-660-7490
Engineering Division Fax: 303-660-9550
100 Third Street
Castle Rock, CO 80104

As Constructed
No Revisions:
Revised:
Void:

US 85 OVER C-470
MISCELLANEOUS BRIDGE DETAILS

Designer: D HOBBS
Detailer: KATHRINEBERG
Sheet Subset: BRIDGE
Structure Numbers: F-16-ICA
Subset Sheets: 42 of 47

Project No./Code
0852-114
23474
Sheet Number 298

Input Northing Offset = 975077.75
Input Easting Offset = 1820116.48
Input Bearing = N 37.69 109.58W

DESCRIPTION

Units: feet;
Project: 0852-114: Subaccount: 21557;
Designer: C, Perry; Detailer: K Kathrineberg
Location: US85 Over E-470;
2-Span (95'-3", 95'-3") Bridge, 165'-6" Out to Out
Continuous Concrete Prestressed Girders
Composite Concrete Slab

VERTICAL ALIGNMENT DATA

ELEVATION AT PI	ELEVATION AT GRADE	STATION	ELEVATION AT GRADE	ELEVATION AT PI	PERCENT GRADE
					0.5
		872+50.0000 PC			
		874+00.0000 PI		5414.53	
		875+50.0000 PT			
					-1.44

TABLE OF ROADWAY CROSS-SLOPES (SUPERELEVATION: E= -NC-)

STATION	SLOPE LEFT	SLOPE RIGHT	VC LENGTH
(ON TANGENT)	-0.02	-0.02	0.00 (MAX)

OFFSET PROFILE CONTROL TO PIVOT POINT= 0.0000 FEET

LAYOUT LINE DATA
LAYOUT LINE DEFINED TO BE COINCIDENT WITH HORIZONTAL CONTROL

	HCL STA	OFFSET	X	Y
LAYOUT LINE INTERSECTS REF LINE AT	872+97.4900	0.0000	0.0000	0.0000
	874+87.9700	0.0000	0.0000	190.4770

DEAD LOAD DEFLECTION DATA
DEFLECTIONS AT TENTH POINTS FROM FITTED CURVE

FOR BENT LINE: CL Brg 1 07 CARD(S): 1 GIRDER LINES REFERENCED BY: E

	0.0	0.1	0.2	0.3	0.4	0.5	0.6	0.7	0.8	0.9	1.0	
INCH	0.0000	0.5995	1.0926	1.4733	1.7115	1.7840	1.6861	1.4300	1.0411	0.5576	0.0000	INCH
FOOT	0.0000	0.0500	0.0911	0.1228	0.1426	0.1487	0.1405	0.1192	0.0868	0.0465	0.0000	FOOT

FOR BENT LINE: CL Brg 2 07 CARD(S): 1 GIRDER LINES REFERENCED BY: I

	0.0	0.1	0.2	0.3	0.4	0.5	0.6	0.7	0.8	0.9	1.0	
INCH	0.0000	0.6975	1.2729	1.7190	1.9969	2.0850	1.9734	1.6777	1.2243	0.6568	0.0000	INCH
FOOT	0.0000	9.4250	18.8500	28.2750	37.7000	47.1250	56.5500	65.9750	75.4000	84.8250	94.2500	FOOT

DEAD LOAD DEFLECTION DATA (CONT)
FOR BENT LINE: Pier 2 Ah 07 CARD(S): 1 GIRDER LINES REFERENCED BY: E

	0.0	0.1	0.2	0.3	0.4	0.5	0.6	0.7	0.8	0.9	1.0	
INCH	0.0000	0.5576	1.0411	1.4300	1.6861	1.7840	1.7115	1.4733	1.0926	0.5995	0.0000	INCH
FOOT	0.0000	0.0465	0.0868	0.1192	0.1405	0.1487	0.1426	0.1228	0.0911	0.0500	0.0000	FOOT

FOR BENT LINE: Pier 2 Ah 07 CARD(S): 1 GIRDER LINES REFERENCED BY: I

	0.0	0.1	0.2	0.3	0.4	0.5	0.6	0.7	0.8	0.9	1.0	
INCH	0.0000	0.6568	1.2243	1.6777	1.9734	2.0850	1.9969	1.7190	1.2729	0.6975	0.0000	INCH
FOOT	0.0000	0.0547	0.1020	0.1398	0.1644	0.1738	0.1664	0.1432	0.1061	0.0581	0.0000	FOOT

	HCL		Parallel To Horizontal Control				0.250000 FEET BELOW FINISHED GRADE			
BENT LINE	STATION	OFFSET	ELEVATION	X	Y	NORTHING	EASTING	BENT LNTH	SKEW	GIRDER LNTH
BF Abut 1	872+95.8800	0.0000	5412.5987	-0.0180	-1.60300	975076.3400	1820115.7100	0.0000	70° 00'32.00"	-1.6030
CL Brg 1	872+97.4900	0.0000	5412.6040	0.0000	0.00000	975077.7500	1820116.4800	0.0000	70° 00'32.00"	0.0000
Pier 2 Bk	873+90.2600	0.0000	5412.6316	0.5340	94.17400	975159.4300	1820160.4700	0.0000	70° 00'32.00"	94.1740
CL Pier 2	873+92.9200	0.0000	5412.6534	0.5340	95.23800	975161.7800	1820161.7200	0.0000	70° 00'32.00"	95.2380
Pier 2 Ah	873+95.5800	0.0000	5412.6694	0.5340	96.30300	975164.1300	1820162.9700	0.0000	70° 00'32.00"	96.3030
CL Brg 3	874+87.9700	0.0000	5412.6795	0.0000	190.47700	975245.9600	1820205.8400	0.0000	70° 00'32.00"	190.4770
BF Abut 3	874+89.5600	0.0000	5412.6838	-0.0180	192.07300	975247.3800	1820206.5700	0.0000	70° 00'32.00"	192.0730

	Left Edge of Deck		Parallel To Horizontal Control					0.250000 FEET BELOW FINISHED GRADE				
BENT LINE	STATION	OFFSET	ELEVATION	ELEV+DL	X	Y	NORTHING	EASTING	BENT LNTH	SKEW	GIRDER LNTH	CRS-SLP
BF Abut 1	872+57.5500	-100.4600	5411.5567		-100.9870	-1.6300	975091.2800	1820009.3100	-100.4600	70° 00'32.00"	-1.6300	-0.020000
CL Brg 1	872+59.1800	-100.4600	5411.5640	5411.5640	-100.9620	0.0000	975092.6800	1820010.0800	-100.4600	70° 00'32.00"	0.0000	-0.020000
F-1	872+68.9400	-100.0000	5411.6131	5411.6631	-100.3570	9.7600	975100.9100	1820015.1400			9.7600	-0.020000
F-2	872+78.5100	-100.0000	5411.6464	5411.7374	-100.2250	19.3300	975109.2000	1820019.7000			19.3300	-0.020000
F-3	872+88.0900	-100.0000	5411.6737	5411.7965	-100.1030	28.9100	975117.5000	1820024.2400			28.9100	-0.020000
F-4	872+97.6600	-100.0000	5411.6951	5411.8377	-99.9920	38.4800	975125.8000	1820028.7800			38.4800	-0.020000
F-5	873+07.2300	-100.0000	5411.7106	5411.8593	-99.8920	48.0500	975134.1000	1820033.3000			48.0500	-0.020000
F-6	873+16.7900	-100.0000	5411.7202	5411.8607	-99.8020	57.6100	975142.4100	1820037.8100			57.6100	-0.020000
F-7	873+26.3500	-100.0000	5411.7239	5411.8431	-99.7230	67.1700	975150.7100	1820042.3100			67.1700	-0.020000
F-8	873+35.9000	-100.0000	5411.7217	5411.8085	-99.6540	76.7200	975159.0200	1820046.8000			76.7200	-0.020000
F-9	873+45.4500	-100.0000	5411.7137	5411.7601	-99.5960	86.2700	975167.3200	1820051.2800			86.2700	-0.020000
Pier 2 Bk	873+55.0000	-100.0000	5411.6998	5411.6998	-99.5490	95.8200	975175.6400	1820055.7500	-100.0000	70° 00'32.00"	95.8200	-0.020000
CL Pier 2	873+56.0800	-100.0000	5411.6978		-99.5440	96.9000	975176.5800	1820056.2600	-100.0000	70° 00'32.00"	96.9000	-0.020000
Pier 2 Ah	873+57.1600	-100.0000	5411.6958	5411.6958	-99.5400	97.9800	975177.5200	1820056.7600	-100.0000	70° 00'32.00"	97.9800	-0.020000
F-1	873+66.7000	-100.0000	5411.6747	5411.7211	-99.5060	107.5200	975185.8300	1820061.2200			107.5200	-0.020000
F-2	873+76.2400	-100.0000	5411.6477	5411.7344	-99.4830	117.0600	975194.1400	1820065.6600			117.0600	-0.020000
F-3	873+85.7800	-100.0000	5411.6148	5411.7340	-99.4690	126.6000	975202.4600	1820070.0900			126.6000	-0.020000
F-4	873+95.3100	-100.0000	5411.5762	5411.7167	-99.4670	136.1300	975210.7700	1820074.5100			136.1300	-0.020000
F-5	874+04.8300	-100.0000	5411.5317	5411.6804	-99.4740	145.6500	975219.0900	1820078.9200			145.6500	-0.020000
F-6	874+14.3600	-100.0000	5411.4813	5411.6240	-99.4920	155.1800	975227.4100	1820083.3200			155.1800	-0.020000
F-7	874+23.8700	-100.0000	5411.4252	5411.5480	-99.5210	164.6900	975235.7300	1820087.7100			164.6900	-0.020000
F-8	874+33.3900	-100.0000	5411.3633	5411.4543	-99.5600	174.2100	975244.0500	1820092.0800			174.2100	-0.020000
F-9	874+42.6500	-100.6800	5411.2838	5411.3337	-100.2350	183.4700	975252.4800	1820095.7300			183.4700	-0.020000
CL Brg 3	874+51.4900	-102.5500	5411.1783	5411.1783	-102.6660	192.3100	975261.0800	1820098.1200	-102.5500	70° 00'32.00"	192.3100	-0.020000
BF Abut 3	874+52.7900	-103.4100	5411.1507		-103.0870	193.6100	975262.6200	1820097.9600	-103.4100	70° 00'32.00"	193.6100	-0.020000

	Left Flow Line		Parallel To Horizontal Control					0.250000 FEET BELOW FINISHED GRADE				
BENT LINE	STATION	OFFSET	ELEVATION	ELEV+DL	X	Y	NORTHING	EASTING	BENT LNTH	SKEW	GIRDER LNTH	CRS-SLP
BF Abut 1	872+63.1300	-86.0000	5411.8701		-86.4440	-33.0440	975089.1200	1820024.6300	-86.0000	70° 00'32.00"	-1.6200	-0.020000
CL Brg 1	872+64.7500	-86.0000	5411.8767	5411.8767	-86.4200	-31.4390	975090.53	1820025.41	-86.0000	70° 00'32.00"	0.0000	-0.020000
F-1	872+74.3000	-86.0000	5411.9125	5411.9624	-86.2830	-21.9890	975098.8100	1820029.9600			9.5500	-0.020000
F-2	872+83.8400	-86.0000	5411.9423	5412.0334	-86.1570	-12.5390	975107.1000	1820034.5100			19.0900	-0.020000
F-3	872+93.3900	-86.0000	5411.9663	5412.0891	-86.0410	-3.0890	975115.3900	1820039.0400			28.6400	-0.020000
F-4	873+02.9400	-86.0000	5411.9844	5412.1270	-85.9360	6.3610	975123.6800	1820043.5700			38.1900	-0.020000
F-5	873+12.4900	-86.0000	5411.9966	5412.1453	-85.8410	15.8110	975131.9800	1820048.0800			47.7400	-0.020000
F-6	873+22.0300	-86.0000	5412.0030	5412.1435	-85.7570	25.2610	975140.2900	1820052.5900			57.2800	-0.020000
F-7	873+31.5800	-86.0000	5412.0035	5412.1226	-85.6840	34.7110	975148.6000	1820057.0900			66.8300	-0.020000
F-8	873+41.1300	-86.0000	5411.9981	5412.0848	-85.6210	44.1610	975159.9200	1820061.5800			76.3800	-0.020000
F-9	873+50.6700	-86.0000	5411.9868	5412.0333	-85.5690	53.6110	975165.2400	1820066.0600			85.9200	-0.020000
Pier 2 Bk	873+60.2200	-86.0000	5411.9696	5411.9696	-85.5280	63.0610	975173.5700	1820070.5300	-86.0000	70° 00'32.00"	95.4700	-0.020000
CL Pier 2	873+61.3000	-86.0000	5411.9673		-85.5240	64.1270	975174.5000	1820071.0300	-86.0000	70° 00'32.00"	96.5500	-0.020000
Pier 2 Ah	873+62.3700	-86.0000	5411.9650	5411.9650	-85.5200	65.1930	975175.4400	1820071.5400	-86.0000	70° 00'32.00"	97.6200	-0.020000
F-1	873+72.7900	-86.0000	5411.9381	5411.9846	-85.4920	74.5170	975183.6600	1820075.9400			108.0400	-0.020000
F-2	873+81.2100	-86.0000	5411.9113	5411.9981	-85.4740	83.8410	975191.8900	1820080.3300			116.4600	-0.020000
F-3	873+90.6300	-86.0000	5411.8759	5411.9951	-85.4670	93.1650	975200.1200	1820084.7100			125.8800	-0.020000
F-4	874+00.0500	-86.0000	5411.8348	5411.9753	-85.4700	102.4890	975208.3600	1820089.0800			135.3000	-0.020000
F-5	874+09.4700	-86.0000	5411.7879	5411.9366	-85.4830	111.8130	975216.6000	1820093.4400			144.7200	-0.020000
F-6	874+18.8900	-86.0000	5411.7353	5411.8780	-85.5060	121.1370	975224.8400	1820097.7900			154.1400	-0.020000
F-7	874+28.3100	-86.0000	5411.6771	5411.7998	-85.5400	130.4610	975233.0900	1820102.1400			163.5600	-0.020000
F-8	874+37.7200	-86.1300	5411.6105	5411.7016	-85.7180	139.7850	975241.4100	1820106.3500			172.9700	-0.020000
F-9	874+47.0800	-87.2100	5411.5197	5411.5696	-86.8450	149.1090	975250.1000	1820109.7000			182.3300	-0.020000
CL Brg 3	874+56.2400	-89.3400	5411.4038	5411.4038	-89.0390	158.4330	975259.1300	1820112.0100	-89.3400	70° 00'32.00"	191.4900	-0.020000
BF Abut 3	874+57.6900	-89.7800	5411.3829		-89.4900	159.9340	975260.6100	1820112.2800	-89.7800	70° 00'32.00"	192.9400	-0.020000

	Girder 1		Parallel To Horizontal Control					0.250000 FEET BELOW FINISHED GRADE				
BENT LINE	STATION	OFFSET	ELEVATION	ELEV+DL	X	Y	NORTHING	EASTING	BENT LNTH	SKEW	GIRDER LNTH	CRS-SLP
BF Abut 1	872+59.0300	-96.6200	5411.6401		-97.1250	-36.9300	975090.7000	7820013.3800	-96.6200	70° 00'32.00"	-1.6200	-0.020000
CL Brg 1	872+60.6500	-96.6400	5411.6468	5411.6468	-97.1250	-35.3330	975092.1137	1820014.1260	-96.6400	70° 00'32.00"	0.0000	-0.020000
F-1	872+70.1700	-96.7900	5411.6819	5411.7319	-97.1250	-25.9160	975100.4300	1820018.5440			9.5200	-0.020000
F-2	872+79.7000	-96.9200	5411.7117	5411.8027	-97.1250	-16.4990	975108.7463	1820022.9621			19.0500	-0.020000
F-3	872+89.2200	-97.0400	5411.7357	5411.8585	-97.1250	-7.0820	975117.0626	1820027.3801			28.5700	-0.020000
F-4	872+98.7500	-97.1400	5411.7544	5411.8970	-97.1250	2.3350	975125.3789	1820031.7982			38.1000	-0.020000
F-5	873+08.2700	-97.2400	5411.7671	5411.9158	-97.1250	11.7520	975133.6937	1820036.2155			47.6200	-0.020000
F-6	873+17.8000	-97.3300	5411.7743	5411.9148	-97.1250	21.1690	975142.0115	1820040.6343			57.1500	-0.020000
F-7	873+27.3200	-97.4100	5411.7758	5411.8949	-97.1250	30.5860	975150.3277	1820045.0524			66.6700	-0.020000
F-8	873+36.8500	-97.4800	5411.7716	5411.8584	-97.1250	40.0030	975158.6440	1820049.4704			76.2000	-0.020000
F-9	873+46.3800	-97.5300	5411.7620	5411.8084	-97.1250	49.4200	975166.9603	1820053.8885			85.7300	-0.020000
Pier 2 Bk	873+55.9000	-97.5800	5411.7465	5411.7465	-97.1250	58.8370	975175.2766	1820058.3066	-97.5800	70° 00'32.00"	95.2500	-0.020000
CL Pier 2	873+56.9800	-97.5800	5411.7445		-97.1250	59.9010	975176.2200	1820058.8100	-97.5800	70° 00'32.00"	96.3300	-0.020000
Pier 2 Ah	873+58.0600	-97.5900	5411.7422	5411.7422	-97.1250	60.9650	975177.1599	1820059.3071	-97.5900	70° 00'32.00"	97.4100	-0.020000
F-1	873+67.5900	-97.6200	5411.7200	5411.7665	-97.1250	70.3820	975185.4766	1820063.7253			106.9400	-0.020000
F-2	873+77.1100	-97.6400	5411.6921	5411.7789	-97.1250	79.7990	975193.7933	1820068.1436			116.4600	-0.020000
F-3	873+86.6400	-97.6600	5411.6584	5411.7776	-97.1250	89.2160	975202.1099	1820072.5619			125.9900	-0.020000
F-4	873+96.1700	-97.6600	5411.6192	5411.7597	-97.1250	98.6330	975210.4266	1820076.9801			135.5200	-0.020000
F-5	874+05.6900	-97.6500	5411.5744	5411.7231	-97.1250	108.0500	975218.7433	1820081.3984			145.0400	-0.020000
F-6	874+15.2200	-97.6300	5411.5239	5411.6665	-97.1250	117.4670	975227.0600	1820085.8167			154.5700	-0.020000
F-7	874+24.7500	-97.6000	5411.4678	5411.5905	-97.1250	126.8840	975235.3766	1820090.2349			164.1000	-0.020000
F-8	874+34.2700	-97.5600	5411.4060	5411.4971	-97.1250	136.3010	975243.6933	1820094.6532			173.6200	-0.020000
F-9	874+43.8000	-97.5100	5411.3386	5411.3885	-97.1250	145.7180	975252.0100	1820099.0715			183.1500	-0.020000
CL Brg 3	874+53.3300	-97.4500	5411.2655	5411.2655	-97.1250	155.1350	975260.3267	1820103.4897	-97.4500	70° 00'32.00"	192.6800	-0.020000
BF Abut 3	874+54.9400	-97.4300	5411.2528		-97.1250	156.7320	975261.7400	1820104.2400	-97.4300	70° 00'32.00"	194.2900	-0.020000

NOTE: ELEVATIONS ARE AT TOP OF CONCRETE DECK 3 INCHES BELOW FINISHED GRADE.

POSITIVE ROADWAY CROSS SLOPE IS UPWARDS FROM THE PROFILE GRADE LINE.

THESE STATIONS, COORDINATES, OFFSETS AND LENGTHS DEFINE THE LAYOUT OF THE STRUCTURE IN A TWO DIMENSIONAL HORIZONTAL PLANE. ELEVATIONS DEFINE THE FINAL GRADE OF THE FINISHED CONCRETE DECK. FABRICATION OF STRUCTURAL COMPONENTS THROUGH THE DIRECT USE OF THIS INFORMATION IS NOT INTENDED NOR ADVISABLE.

Design	INITIAL	DATE
Designed By	DRH	2/2019
Checked By	SPO	2/2019
Detail		
Detailed By	KBK	2/2019
Checked By	TLP	2/2019
Quantities		
Quantities By	CMA	2/2019
Checked By	TLP	2/2019

DMADDOCK 2:51:22 PM pw:\\PWAPPOMA001:NorthCentral_Omaha\Documents\200020\CON0099931\00000000259892\6.0_CAD_BIM\6.2_Work_In_Progress\NEPA Re-Eval Task\Bridge\Drawings\US85_NEPA_BRDG_DeckElevations_1.dgn

Print Date: 4/15/2021
File Name: US85_NEPA_BRDG_DeckElevations_1.dgn
Horiz. Scale: 1:1 Vert. Scale: As Noted

HDR
1670 BROADWAY, SUITE 3400 DENVER, COLORADO 80202
Phone: 303-764-1520 FAX: 303-860-7139

Sheet Revisions

Date:	Comments	Init.

DOUGLAS COUNTY
COLORADO
Department of Public Works Phone: 303-660-7490
Engineering Division Fax: 303-660-9550
100 Third Street
Castle Rock, CO 80104

As Constructed
No Revisions:
Revised:
Void:

US 85 OVER C-470
DECK ELEVATIONS (1 OF 5)

Designer: D HOBBS
Detailer: KATHRINEBERG
Sheet Subset: BRIDGE
Structure Numbers: F-16-ICA
Subset Sheets: 43 of 47

Project No./Code
0852-114
23474

	Girder 2		Parallel To Horizontal Control					0.250000 FEET BELOW FINISHED GRADE				
BENT LINE	STATION	OFFSET	ELEVATION	ELEV+DL	X	Y	NORTHING	EASTING	BENT LNTH	SKEW	GIRDER LNTH	CRS-SLP
BF Abut 1	872+62.1000	-88.6700	5411.8124		-89.1250	-34.0190	975089.5200	1820021.8100	-88.6700	70°00'32.00"	-1.6100	-0.020000
CL Brg 1	872+63.7100	-88.6900	5411.8187	5411.8187	-89.1250	-32.4220	975090.9306	1820022.5563	-88.6900	70°00'32.00"	0.0000	-0.020000
F-1	872+73.2300	-88.8300	5411.8522	5411.9103	-89.1250	-23.0050	975099.2469	1820026.9743			9.5200	-0.020000
F-2	872+82.7500	-88.9500	5411.8802	5411.9863	-89.1250	-13.5880	975107.5632	1820031.3924			19.0400	-0.020000
F-3	872+92.2600	-89.0700	5411.9024	5412.0456	-89.1250	-4.1710	975115.8795	1820035.8105			28.5500	-0.020000
F-4	873+01.7800	-89.1800	5411.9189	5412.0853	-89.1250	5.2460	975124.1958	1820040.2285			38.0700	-0.020000
F-5	873+11.3000	-89.2700	5411.9300	5412.1038	-89.1250	14.6630	975132.5106	1820044.6458			47.5900	-0.020000
F-6	873+20.8100	-89.3600	5411.9353	5412.0997	-89.1250	24.0800	975140.8284	1820049.0646			57.1000	-0.020000
F-7	873+30.3300	-89.4300	5411.9351	5412.0749	-89.1250	33.4970	975149.1446	1820053.4827			66.6200	-0.020000
F-8	873+39.8500	-89.5000	5411.9291	5412.0311	-89.1250	42.9140	975157.4609	1820057.9008			76.1400	-0.020000
F-9	873+49.3700	-89.5500	5411.9177	5411.9724	-89.1250	52.3310	975165.7772	1820062.3188			85.6600	-0.020000
Pier 2 Bk	873+58.8800	-89.5900	5411.9006	5411.9006	-89.1250	61.7480	975174.0935	1820066.7369	-89.5900	70°00'32.00"	95.1700	-0.020000
CL Pier 2	873+59.9600	-89.6000	5411.8982		-89.1250	62.8120	975175.0400	1820067.2400	-89.6000	70°00'32.00"	96.2500	-0.020000
Pier 2 Ah	873+61.0300	-89.6000	5411.8959	5411.8959	-89.1250	63.8760	975175.9768	1820067.7374	-89.6000	70°00'32.00"	97.3200	-0.020000
F-1	873+70.5500	-89.6300	5411.8719	5411.9266	-89.1250	73.2930	975184.2935	1820072.1557			106.8400	-0.020000
F-2	873+80.0700	-89.6500	5411.8422	5411.9442	-89.1250	82.7100	975192.6102	1820076.5739			116.3600	-0.020000
F-3	873+89.5900	-89.6600	5411.8069	5411.9467	-89.1250	92.1270	975200.9268	1820080.9922			125.8800	-0.020000
F-4	873+99.1100	-89.6600	5411.7659	5411.9304	-89.1250	101.5440	975209.2435	1820085.4105			135.4000	-0.020000
F-5	874+08.6200	-89.6400	5411.7196	5411.8933	-89.1250	110.9610	975217.5602	1820089.8287			144.9100	-0.020000
F-6	874+18.1400	-89.6200	5411.6673	5411.8337	-89.1250	120.3780	975225.8769	1820094.2470			154.4300	-0.020000
F-7	874+27.6600	-89.5900	5411.6095	5411.7527	-89.1250	129.7950	975234.1935	1820098.6653			163.9500	-0.020000
F-8	874+37.1800	-89.5400	5411.5462	5411.6522	-89.1250	139.2120	975242.5102	1820103.0835			173.4700	-0.020000
F-9	874+46.6900	-89.4900	5411.4771	5411.5352	-89.1250	148.6290	975250.8269	1820107.5018			182.9800	-0.020000
CL Brg 3	874+56.2100	-89.4200	5411.4025	5411.4025	-89.1250	158.0460	975259.1436	1820111.9200	-89.4200	70°00'32.00"	192.5000	-0.020000
BF Abut 3	874+57.8200	-89.4100	5411.3892		-89.1250	159.6430	975260.5500	1820112.6700	-89.4100	70°00'32.00"	194.1100	-0.020000

	Girder 3		Parallel To Horizontal Control					0.250000 FEET BELOW FINISHED GRADE				
BENT LINE	STATION	OFFSET	ELEVATION	ELEV+DL	X	Y	NORTHING	EASTING	BENT LNTH	SKEW	GIRDER LNTH	CRS-SLP
BF Abut 1	872+65.1600	-80.7100	5411.9842		1.0000	-31.1090	975088.3400	1820030.2400	-80.7100	70°00'32.00"	-1.6200	-0.020000
CL Brg 1	872+66.7800	-80.7300	5411.9902	5411.9902	-81.1250	-29.5120	975089.7475	1820030.9866	-80.7300	70°00'32.00"	0.0000	-0.020000
F-1	872+76.2800	-80.8700	5412.0217	5412.0799	-81.1250	-20.0950	975098.0638	1820035.4047			9.5000	-0.020000
F-2	872+85.7900	-80.9900	5412.0479	5412.1539	-81.1250	-10.6780	975106.3801	1820039.8227			19.0100	-0.020000
F-3	872+95.3000	-81.1100	5412.0682	5412.2114	-81.1250	-1.2610	975114.6964	1820044.2408			28.5200	-0.020000
F-4	873+04.8000	-81.2100	5412.0830	5412.2494	-81.1250	8.1560	975123.0127	1820048.6588			38.0200	-0.020000
F-5	873+14.3100	-81.3000	5412.0923	5412.2660	-81.1250	17.5730	975131.3275	1820053.0761			47.5300	-0.020000
F-6	873+23.8200	-81.3800	5412.0959	5412.2604	-81.1250	26.9900	975139.6453	1820057.4950			57.0400	-0.020000
F-7	873+33.3300	-81.4500	5412.0939	5412.2337	-81.1250	36.4070	975147.9615	1820061.9130			66.5500	-0.020000
F-8	873+42.8400	-81.5100	5412.0863	5412.1883	-81.1250	45.8240	975156.2778	1820066.3311			76.0600	-0.020000
F-9	873+52.3500	-81.5600	5412.0730	5412.1277	-81.1250	55.2410	975164.5941	1820070.7491			85.5700	-0.020000
Pier 2 Bk	873+61.8500	-81.6000	5412.0541	5412.0541	-81.1250	64.6580	975172.9104	1820075.1672	-81.6000	70°00'32.00"	95.0700	-0.020000
CL Pier 2	873+62.9300	-81.6100	5412.0515		-81.1250	65.7220	975173.8500	1820075.6700	-81.6100	70°00'32.00"	96.1500	-0.020000
Pier 2 Ah	873+64.0000	-81.6100	5412.0490	5412.0490	-81.1250	66.7860	975174.7937	1820076.1677	-81.6100	70°00'32.00"	97.2200	-0.020000
F-1	873+73.5100	-81.6400	5412.0232	5412.0779	-81.1250	76.2030	975183.1104	1820080.5860			106.7300	-0.020000
F-2	873+83.0200	-81.6500	5411.9919	5412.0940	-81.1250	85.6200	975191.4271	1820085.0043			116.2400	-0.020000
F-3	873+92.5300	-81.6600	5411.9549	5412.0947	-81.1250	95.0370	975199.7437	1820089.4225			125.7500	-0.020000
F-4	874+02.0400	-81.6500	5411.9123	5412.0768	-81.1250	104.4540	975208.0604	1820093.8408			135.2600	-0.020000
F-5	874+11.5500	-81.6400	5411.8640	5412.0378	-81.1250	113.8710	975216.3771	1820098.2590			144.7700	-0.020000
F-6	874+21.0600	-81.6100	5411.8102	5411.9766	-81.1250	123.2880	975224.6938	1820102.6773			154.2800	-0.020000
F-7	874+30.5600	-81.5800	5411.7507	5411.8939	-81.1250	132.7050	975233.0104	1820107.0956			163.7800	-0.020000
F-8	874+40.0700	-81.5300	5411.6857	5411.7917	-81.1250	142.1220	975241.3271	1820111.5138			173.2900	-0.020000
F-9	874+49.5800	-81.4700	5411.6150	5411.6731	-81.1250	151.5390	975249.6438	1820115.9321			182.8000	-0.020000
CL Brg 3	874+59.0900	-81.4000	5411.5387	5411.5387	-81.1250	160.9560	975257.9604	1820120.3504	-81.4000	70°00'32.00"	192.3100	-0.020000
BF Abut 3	874+60.7000	-81.3900	5411.5252		-81.1250	162.5530	975259.3700	1820121.1000	-81.3900	70°00'32.00"	193.9200	-0.020000

	Girder 4		Parallel To Horizontal Control					0.250000 FEET BELOW FINISHED GRADE				
BENT LINE	STATION	OFFSET	ELEVATION	ELEV+DL	X	Y	NORTHING	EASTING	BENT LNTH	SKEW	GIRDER LNTH	CRS-SLP
BF Abut 1	872+68.2200	-72.7500	5412.1554		73.1250	-28.1990	975087.1500	1820038.6700	-72.7500	70°00'32.00"	-1.6100	-0.020000
CL Brg 1	872+69.8300	-72.7800	5412.1609	5412.1609	73.1250	-26.6020	975088.5644	1820039.4169	-72.7800	70°00'32.00"	0.0000	-0.020000
F-1	872+79.3300	-72.9100	5412.1907	5412.2489	73.1250	-17.1850	975096.8807	1820043.8350			9.5000	-0.020000
F-2	872+88.8300	-73.0300	5412.2150	5412.3210	73.1250	-7.7680	975105.1970	1820048.2530			19.0000	-0.020000
F-3	872+98.3200	-73.1400	5412.2336	5412.3768	73.1250	1.6490	975113.5133	1820052.6711			28.4900	-0.020000
F-4	873+07.8200	-73.2400	5412.2466	5412.4130	73.1250	11.0660	975121.8296	1820057.0892			37.9900	-0.020000
F-5	873+17.3200	-73.3300	5412.2540	5412.4277	73.1250	20.4830	975130.1444	1820061.5064			47.4900	-0.020000
F-6	873+26.8200	-73.4100	5412.2557	5412.4202	73.1250	29.9000	975138.4622	1820065.9253			56.9900	-0.020000
F-7	873+36.3200	-73.4700	5412.2521	5412.3919	73.1250	39.3170	975146.7784	1820070.3433			66.4900	-0.020000
F-8	873+45.8200	-73.5300	5412.2427	5412.3447	73.1250	48.7340	975155.0947	1820074.7614			75.9900	-0.020000
F-9	873+55.3200	-73.5800	5412.2276	5412.2823	73.1250	58.1510	975163.4110	1820079.1795			85.4900	-0.020000
Pier 2 Bk	873+64.8200	-73.6100	5412.2071	5412.2071	73.1250	67.5680	975171.7273	1820083.5975	-73.6100	70°00'32.00"	94.9900	-0.020000
CL Pier 2	873+65.8900	-73.6200	5412.2043		73.1250	68.6320	975172.6700	1820084.1000	-73.6200	70°00'32.00"	96.0600	-0.020000
Pier 2 Ah	873+66.9700	-73.6200	5412.2016	5412.2016	73.1250	69.6960	975173.6106	1820084.5980	-73.6200	70°00'32.00"	97.1400	-0.020000
F-1	873+76.4700	-73.6400	5412.1742	5412.2289	73.1250	79.1130	975181.9273	1820089.0163			106.6400	-0.020000
F-2	873+85.9700	-73.6600	5412.1409	5412.2430	73.1250	88.5300	975190.2440	1820093.4346			116.1400	-0.020000
F-3	873+95.4700	-73.6600	5412.1023	5412.2421	73.1250	97.9470	975198.5606	1820097.8528			125.6400	-0.020000
F-4	874+04.9700	-73.6500	5412.0580	5412.2225	73.1250	107.3640	975206.8773	1820102.2711			135.1400	-0.020000
F-5	874+14.4600	-73.6300	5412.0082	5412.1819	73.1250	116.7810	975215.1940	1820106.6894			144.6300	-0.020000
F-6	874+23.9600	-73.6000	5411.9527	5412.1191	73.1250	126.1980	975223.5107	1820111.1076			154.1300	-0.020000
F-7	874+33.4600	-73.5600	5411.8916	5412.0348	73.1250	135.6150	975231.8273	1820115.5259			163.6300	-0.020000
F-8	874+42.9600	-73.5100	5411.8249	5411.9309	73.1250	145.0320	975240.1440	1820119.9442			173.1300	-0.020000
F-9	874+52.4600	-73.4500	5411.7525	5411.8106	73.1250	154.4490	975248.4607	1820124.3624			182.6300	-0.020000
CL Brg 3	874+61.9600	-73.3800	5411.6746	5411.6746	73.1250	163.8660	975256.7773	1820128.7807	-73.3800	70°00'32.00"	192.1300	-0.020000
BF Abut 3	874+63.5700	-73.3700	5411.6607		73.1250	165.4630	975258.1900	1820129.5300	-73.3700	70°00'32.00"	193.7400	-0.020000

	Girder 5		Parallel To Horizontal Control					0.250000 FEET BELOW FINISHED GRADE				
BENT LINE	STATION	OFFSET	ELEVATION	ELEV+DL	X	Y	NORTHING	EASTING	BENT LNTH	SKEW	GIRDER LNTH	CRS-SLP
BF Abut 1	872+71.2700	-64.8000	5412.3258		-65.1250	-25.2880	975085.9700	1820047.1000	-64.8000	70°00'32.00"	-1.6100	-0.020000
CL Brg 1	872+72.8800	-64.8200	5412.3311	5412.3311	-65.1250	-23.6910	975087.3813	1820047.8472	-64.8200	70°00'32.00"	0.0000	-0.020000
F-1	872+82.3700	-64.9500	5412.3591	5412.4172	-65.1250	-14.2740	975095.6976	1820052.2653			9.4900	-0.020000
F-2	872+91.8600	-65.0600	5412.3816	5412.4877	-65.1250	-4.8570	975104.0139	1820056.6834			18.9800	-0.020000
F-3	873+01.3500	-65.1700	5412.3984	5412.5416	-65.1250	4.5600	975112.3302	1820061.1014			28.4700	-0.020000
F-4	873+10.8400	-65.2700	5412.4095	5412.5759	-65.1250	13.9770	975120.6465	1820065.5195			37.9600	-0.020000
F-5	873+20.3300	-65.3500	5412.4153	5412.5890	-65.1250	23.3940	975128.9613	1820069.9368			47.4500	-0.020000
F-6	873+29.8200	-65.4300	5412.4152	5412.5797	-65.1250	32.8110	975137.2791	1820074.3556			56.9400	-0.020000
F-7	873+39.3100	-65.4900	5412.4097	5412.5495	-65.1250	42.2280	975145.5953	1820078.7737			66.4300	-0.020000
F-8	873+48.8000	-65.5500	5412.3985	5412.5005	-65.1250	51.6450	975153.9116	1820083.1917			75.9200	-0.020000
F-9	873+58.2900	-65.5900	5412.3818	5412.4365	-65.1250	61.0620	975162.2279	1820087.6098			85.4100	-0.020000
Pier 2 Bk	873+67.7800	-65.6200	5412.3595	5412.3595	-65.1250	70.4790	975170.5442	1820092.0278	-65.6200	70°00'32.00"	94.9000	-0.020000
CL Pier 2	873+68.8500	-65.6300	5412.3565		-65.1250	71.5430	975171.4900	1820092.5300	-65.6300	70°00'32.00"	95.9700	-0.020000
Pier 2 Ah	873+69.9200	-65.6300	5412.3536	5412.3536	-65.1250	72.6070	975172.4275	1820093.0284	-65.6300	70°00'32.00"	97.0400	-0.020000
F-1	873+79.4100	-65.6500	5412.3244	5412.3792	-65.1250	82.0240	975180.7442	1820097.4466			106.5300	-0.020000
F-2	873+88.9000	-65.6600	5412.2896	5412.3917	-65.1250	91.4410	975189.0609	1820101.8649			116.0200	-0.020000
F-3	873+98.4000	-65.6600	5412.2492	5412.3890	-65.1250	100.8580	975197.3775	1820106.2832			125.5200	-0.020000
F-4	874+07.8900	-65.6500	5412.2032	5412.3676	-65.1250	110.2750	975205.6942	1820110.7014			135.0100	-0.020000
F-5	874+17.3800	-65.6200	5412.1518	5412.3255	-65.1250	119.6920	975214.0109	1820115.1197			144.5000	-0.020000
F-6	874+26.8700	-65.5900	5412.0945	5412.2609	-65.1250	129.1090	975222.3276	1820119.5380			153.9900	-0.020000
F-7	874+36.3600	-65.5500	5412.0317	5412.1750	-65.1250	138.5260	975230.6442	1820123.9562			163.4800	-0.020000
F-8	874+45.8500	-65.4900	5411.9635	5412.0696	-65.1250	147.9430	975238.9609	1820128.3745			172.9700	-0.020000
F-9	874+55.3400	-65.4300	5411.8895	5411.9476	-65.1250	157.3600	975247.2776	1820132.7928			182.4600	-0.020000
CL Brg 3	874+64.8300	-65.3600	5411.8098	5411.8098	-65.1250	166.7770	975255.5942	1820137.2110	-65.3600	70°00'32.00"	191.9500	-0.020000
BF Abut 3	874+66.4400	-65.3400	5411.7959		-65.1250	168.3740	975257.0000	1820137.9600	-65.3400	70°00'32.00"	193.5600	-0.020000

	Girder 6		Parallel To Horizontal Control					0.250000 FEET BELOW FINISHED GRADE				
BENT LINE	STATION	OFFSET	ELEVATION	ELEV+DL	X	Y	NORTHING	EASTING	BENT LNTH	SKEW	GIRDER LNTH	CRS-SLP
BF Abut 1	872+74.3200	-56.8400	5412.4957		-57.1250	-22.3780	975084.7900	1820055.5300	-56.8400	70°00'32.00"	-1.6000	-0.020000
CL Brg 1	872+75.9200	-56.8600	5412.5008	5412.5008	-57.1250	-20.7810	975086.1982	1820056.2776	-56.8600	70°00'32.00"	0.0000	-0.020000
F-1	872+85.4000	-56.9900	5412.5268	5412.5849	-57.1250	-11.3640	975094.5145	1820060.6956			9.4800	-0.020000
F-2	872+94.8800	-57.1000	5412.5475	5412.6536	-57.1250	-1.9470	975102.8308	1820065.1137			18.9600	-0.020000
F-3	873+04.3600	-57.2000	5412.5626	5412.7058	-57.1250	7.4700	975111.1471	1820069.5318			28.4400	-0.020000
F-4	873+13.8400	-57.3000	5412.5719	5412.7383	-57.1250	16.8870	975119.4634	1820073.9498			37.9200	-0.020000
F-5	873+23.3300	-57.3800	5412.5758	5412.7495	-57.1250	26.3040	975127.7782	1820078.3671			47.4100	-0.020000
F-6	873+32.8100	-57.4500	5412.5741	5412.7385	-57.1250	35.7210	975136.0960	1820082.7859			56.8900	-0.020000
F-7	873+42.2900	-57.5100	5412.5668	5412.7066	-57.1250	45.1380	975144.4122	1820087.2040			66.3700	-0.020000
F-8	873+51.7700	-57.5600	5412.5539	5412.6559	-57.1250	54.5550	975152.7285	1820091.6221			75.8500	-0.020000
F-9	873+61.2500	-57.6000	5412.5354	5412.5902	-57.1250	63.9720	975161.0448	1820096.0401			85.3300	-0.020000
Pier 2 Bk	873+70.7300	-57.6300	5412.5114	5412.5114	-57.1250	73.3890	975169.3611	1820100.4582	-57.6300	70°00'32.00"	94.8100	-0.020000
CL Pier 2	873+71.8000	-57.6300	5412.5084		-57.1250	74.4530	975170.3000	1820100.9600	-57.6300	70°00'32.00"	95.8800	-0.020000
Pier 2 Ah	873+72.8800	-57.6400	5412.5051	5412.5051	-57.1250	75.5170	975171.2444	1820101.4587	-57.6400	70°00'32.00"	96.9600	-0.020000
F-1	873+82.3600	-57.6500	5412.4743	5412.5290	-57.1250	84.9340	975179.5611	1820105.8770			106.4400	-0.020000
F-2	873+91.8400	-57.6600	5412.4377	5412.5398	-57.1250	94.3510	975187.8778	1820110.2952			115.9200	-0.020000
F-3	874+01.3200	-57.6500	5412.3958	5412.5356	-57.1250	103.7680	975196.1944	1820114.7135			125.4000	-0.020000
F-4	874+10.8000	-57.6400	5412.3480	5412.5125	-57.1250	113.1850	975204.5111	1820119.1318			134.8800	-0.020000
F-5	874+20.2800	-57.6100	5412.2949	5412.4687	-57.1250	122.6020	975212.8278	1820123.5500			144.3600	-0.020000
F-6	874+29.7700	-57.5800	5412.2359	5412.4023	-57.1250	132.0190	975221.1445	1820127.9683			153.8500	-0.020000
F-7	874+39.2500	-57.5300	5412.1716	5412.3148	-57.1250	141.4360	975229.4611	1820132.3865			163.3300	-0.020000
F-8	874+48.7300	-57.4800	5412.1015	5412.2075	-57.1250	150.8530	975237.7778	1820136.8048			172.8100	-0.020000
F-9	874+58.2100	-57.4100	5412.0260	5412.0841	-57.1250	160.2700	975246.0945	1820141.2231			182.2900	-0.020000
CL Brg 3	874+67.6900	-57.3300	5411.9449	5411.9449	-57.1250	169.6870	975254.4111	1820145.6413	-57.3300	70°00'32.00"	191.7700	-0.020000
BF Abut 3	874+69.3000	-57.3200	5411.9305		-57.1250	171.2840	975255.8200	1820146.3900	-57.3200	70°00'32.00"	193.3800	-0.020000

	Girder 7		Parallel To Horizontal Control					0.250000 FEET BELOW FINISHED GRADE				
BENT LINE	STATION	OFFSET	ELEVATION	ELEV+DL	X	Y	NORTHING	EASTING	BENT LNTH	SKEW	GIRDER LNTH	CRS-SLP
BF Abut 1	872+77.3500	-48.8800	5412.6650		-49.1250	-19.4670	975083.6100	1820063.9600	-48.8800	70°00'32.00"	-1.6100	-0.020000
CL Brg 1	872+78.9600	-48.9000	5412.6698	5412.6698	-49.1250	-17.8700	975085.0151	1820064.7079	-48.9000	70°00'32.00"	0.0000	-0.020000
F-1	872+88.4300	-49.0200	5412.6942	5412.7523	-49.1250	-8.4530	975093.3314	1820069.1260			9.4700	-0.020000
F-2	872+97.9000	-49.1300	5412.7130	5412.8190	-49.1250	0.9640	975101.6477	1820073.5440			18.9400	-0.020000
F-3	873+07.3700	-49.2300	5412.7262	5412.8694	-49.1250	10.3810	975109.9640	1820077.9621			28.4100	-0.020000
F-4	873+16.8500	-49.3200	5412.7339	5412.9003	-49.1250	19.7980	975118.2803	1820082.3801			37.8900	-0.020000
F-5	873+26.3200	-49.4000	5412.7359	5412.9097	-49.1250	29.2150	975126.5951	1820086.7974			47.3600	-0.020000
F-6	873+35.7900	-49.4700	5412.7324	5412.8968	-49.1250	38.6320	975134.9129	1820091.2163			56.8300	-0.020000
F-7	873+45.2600	-49.5300	5412.7233	5412.8631	-49.1250	48.0490	975143.2291	1820095.6343			66.3000	-0.020000
F-8	873+54.7400	-49.5700	5412.7088	5412.8108	-49.1250	57.4660	975151.5454	1820100.0524			75.7800	-0.020000
F-9	873+64.2100	-49.6100	5412.6885	5412.7433	-49.1250	66.8830	975159.8617	1820104.4704			85.2500	-0.020000
Pier 2 Bk	873+73.6800	-49.6400	5412.6627	5412.6627	-49.1250	76.3000	975168.1780	1820108.8885	-49.6400	70°00'32.00"	94.7200	-0.020000
CL Pier 2	873+74.7500	-49.6400	5412.6595		-49.1250	77.3640	975169.1200	1820109.3900	-49.6400	70°00'32.00"	95.7900	-0.020000
Pier 2 Ah	873+75.8200	-49.6400	5412.6562	5412.6562	-49.1250	78.4280	975170.0613	1820109.8890	-49.6400	70°00'32.00"	96.8600	-0.020000
F-1	873+85.2900	-49.6600	5412.6235	5412.6782	-49.1250	87.8450	975178.3780	1820114.3073			106.3300	-0.020000
F-2	873+94.7700	-49.6600	5412.5853	5412.6874	-49.1250	97.2620	975186.6947	1820118.7255			115.8100	-0.020000
F-3	874+04.2400	-49.6500	5412.5416	5412.6814	-49.1250	106.6790	975195.0113	1820123.1438			125.2800	-0.020000
F-4	874+13.7100	-49.6300	5412.4924	5412.6568	-49.1250	116.0960	975203.3280	1820127.5621			134.7500	-0.020000
F-5	874+23.1900	-49.6000	5412.4375	5412.6112	-49.1250	125.5130	975211.6447	1820131.9803			144.2300	-0.020000
F-6	874+32.6600	-49.5700	5412.3768	5412.5432	-49.1250	134.9300	975219.9614	1820136.3986			153.7000	-0.020000
F-7	874+42.1300	-49.5200	5412.3108	5412.4540	-49.1250	144.3470	975228.2780	1820140.8169			163.1700	-0.020000
F-8	874+51.6000	-49.4600	5412.2392	5412.3453	-49.1250	153.7640	975236.5947	1820145.2351			172.6400	-0.020000
F-9	874+61.0800	-49.3900	5412.1619	5412.2201	-49.1250	163.1810	975244.9114	1820149.6534			182.1200	-0.020000
CL Brg 3	874+70.5500	-49.3000	5412.0794	5412.0794	-49.1250	172.5980	975253.2280	1820154.0717	-49.3000	70°00'32.00"	191.5900	-0.020000
BF Abut 3	874+72.1500	-49.2900	5412.0648		-49.1250	174.1950	975254.6400	1820154.8200	-49.2900	70°00'32.00"	193.1900	-0.020000

NOTE: ELEVATIONS ARE AT TOP OF CONCRETE DECK 3 INCHES BELOW FINISHED GRADE.

POSITIVE ROADWAY CROSS SLOPE IS UPWARDS FROM THE PROFILE GRADE LINE.

THESE STATIONS, COORDINATES, OFFSETS AND LENGTHS DEFINE THE LAYOUT OF THE STRUCTURE IN A TWO DIMENSIONAL HORIZONTAL PLANE. ELEVATIONS DEFINE THE FINAL GRADE OF THE FINISHED CONCRETE DECK. FABRICATION OF STRUCTURAL COMPONENTS THROUGH THE DIRECT USE OF THIS INFORMATION IS NOT INTENDED NOR ADVISABLE.

Quantities			
	INITIAL	DATE	
GMA	2/2019		
TLP	2/2019		

Detail			
	INITIAL	DATE	
KBK	2/2019		
TLP	2/2019		

Design			
	INITIAL	DATE	
DRH	2/2019		
SPD	2/2019		

Designed By
Checked By
Detailed By
Checked By
Quantities By
Checked By

DMADDOCK 2:51:23 PM pw:\\PWAPPDMA001:North_Central_Omaha\Documents\200020\DN0099931\0000000000259892\6.0_CAD_BIM\6.2_Work_In_Progress\NEPA Re-Eval Task\Bridge\Drawings\US85_NEPA_BRDG_DeckElevations_2.dgn

Print Date: 4/15/2021
File Name: US85_NEPA_BRDG_DeckElevations_2.dgn
Horiz. Scale: 1:1 Vert. Scale: As Noted

HDR
1670 BROADWAY, SUITE 3400 DENVER, COLORADO 80202
Phone: 303-764-1520 FAX: 303-860-7139

Sheet Revisions

Date:	Comments	Init.

DOUGLAS COUNTY COLORADO
Department of Public Works Phone: 303-660-7490
Engineering Division Fax: 303-660-9550
100 Third Street
Castle Rock, CO 80104

As Constructed
No Revisions:
Revised:
Void:

US 85 OVER C-470
DECK ELEVATIONS (2 OF 5)

Designer: D HOBBS
Detailer: KATHRINEBERG
Sheet Subset: BRIDGE
Structure Numbers: F-16-ICA
Subset Sheets: 44 of 47

Project No./Code
0852-114
23474
Sheet Number 300

Girder 8

BENT LINE	STATION	OFFSET	Parallel To Horizontal Control: ELEVATION	ELEV+DL	X	Y	NORTHING	0.250000 FEET BELOW FINISHED GRADE: EASTING	BENT LNTH	SKEW	GIRDER LNTH	CRS-SLP
BF Abut 1	872+80.3900	-40.9200	5412.8338		-41.1250	-16.5570	975082.4200	1820072.3900	-40.9200	70°00'32.00"	-1.6000	-0.020000
CL Brg 1	872+81.9900	-40.9400	5412.8382	5412.8382	-41.1250	-14.9600	975083.8320	1820073.1382	-40.9400	70°00'32.00"	0.0000	-0.020000
F-1	872+91.4500	-41.0600	5412.8607	5412.9188	-41.1250	-5.5430	975092.1483	1820077.5563			9.4600	-0.020000
F-2	873+00.9200	-41.1700	5412.8777	5412.9837	-41.1250	3.8740	975100.4646	1820081.9743			18.9300	-0.020000
F-3	873+10.3800	-41.2600	5412.8892	5413.0325	-41.1250	13.2910	975108.7809	1820086.3924			28.3900	-0.020000
F-4	873+19.8400	-41.3500	5412.8950	5413.0614	-41.1250	22.7080	975117.0972	1820090.8105			37.8500	-0.020000
F-5	873+29.3100	-41.4200	5412.8955	5413.0692	-41.1250	32.1250	975125.4120	1820095.2277			47.3200	-0.020000
F-6	873+38.7700	-41.4900	5412.8901	5413.0546	-41.1250	41.5420	975133.7298	1820099.6466			56.7800	-0.020000
F-7	873+48.2300	-41.5400	5412.8794	5413.0192	-41.1250	50.9590	975142.0460	1820104.0646			66.2400	-0.020000
F-8	873+57.7000	-41.5900	5412.8629	5412.9650	-41.1250	60.3760	975150.3623	1820108.4827			75.7100	-0.020000
F-9	873+67.1600	-41.6200	5412.8411	5412.8958	-41.1250	69.7930	975158.6786	1820112.9008			85.1700	-0.020000
Pier 2 Bk	873+76.6200	-41.6400	5412.8137	5412.8137	-41.1250	79.2100	975166.9949	1820117.3188	-41.6400	70°00'32.00"	94.6300	-0.020000
CL Pier 2	873+77.6900	-41.6500	5412.8101		-41.1250	80.2740	975167.9400	1820117.8200	-41.6500	70°00'32.00"	95.7000	-0.020000
Pier 2 Ah	873+78.7600	-41.6500	5412.8066	5412.8066	-41.1250	81.3380	975168.8782	1820118.3193	-41.6500	70°00'32.00"	96.7700	-0.020000
F-1	873+88.2300	-41.6600	5412.7723	5412.8270	-41.1250	90.7550	975177.1949	1820122.7376			106.2400	-0.020000
F-2	873+97.6900	-41.6600	5412.7324	5412.8344	-41.1250	100.1720	975185.5116	1820127.1559			115.7000	-0.020000
F-3	874+07.1500	-41.6500	5412.6870	5412.8268	-41.1250	109.5890	975193.8282	1820131.5741			125.1600	-0.020000
F-4	874+16.6200	-41.6300	5412.6359	5412.8004	-41.1250	119.0060	975202.1449	1820135.9924			134.6300	-0.020000
F-5	874+26.0800	-41.5900	5412.5796	5412.7533	-41.1250	128.4230	975210.4616	1820140.4107			144.0900	-0.020000
F-6	874+35.5400	-41.5500	5412.5174	5412.6839	-41.1250	137.8400	975218.7783	1820144.8289			153.5500	-0.020000
F-7	874+45.0100	-41.5000	5412.4497	5412.5929	-41.1250	147.2570	975227.0949	1820149.2472			163.0200	-0.020000
F-8	874+54.4700	-41.4400	5412.3764	5412.4825	-41.1250	156.6740	975235.4116	1820153.6655			172.4800	-0.020000
F-9	874+63.9300	-41.3600	5412.2978	5412.3559	-41.1250	166.0910	975243.7283	1820158.0837			181.9400	-0.020000
CL Brg 3	874+73.4000	-41.2800	5412.2133	5412.2133	-41.1250	175.5080	975252.0449	1820162.5020	-41.2800	70°00'32.00"	191.4100	-0.020000
BF Abut 3	874+75.0000	-41.2600	5412.1986		-41.1250	177.1050	975253.4500	1820163.2500	-41.2600	70°00'32.00"	193.0100	-0.020000

Girder 9

BENT LINE	STATION	OFFSET	Parallel To Horizontal Control: ELEVATION	ELEV+DL	X	Y	NORTHING	0.250000 FEET BELOW FINISHED GRADE: EASTING	BENT LNTH	SKEW	GIRDER LNTH	CRS-SLP
BF Abut 1	872+83.4200	-32.9600	5413.0019		-33.1250	-13.6470	975081.2400	1820080.8200	-32.9600	70°00'32.00"	-1.6000	-0.020000
CL Brg 1	872+85.0200	-32.9800	5413.0060	5413.0060	-33.1250	-12.0500	975082.6489	1820081.5685	-32.9800	70°00'32.00"	0.0000	-0.020000
F-1	872+94.4700	-33.0900	5413.0268	5413.0850	-33.1250	-2.6330	975090.9652	1820085.9866			9.4500	-0.020000
F-2	873+03.9200	-33.2000	5413.0419	5413.1480	-33.1250	6.7840	975099.2815	1820090.4047			18.9000	-0.020000
F-3	873+13.3800	-33.2900	5413.0517	5413.1949	-33.1250	16.2010	975107.5978	1820094.8227			28.3600	-0.020000
F-4	873+22.8300	-33.3700	5413.0558	5413.2222	-33.1250	25.6180	975115.9141	1820099.2408			37.8100	-0.020000
F-5	873+32.2900	-33.4400	5413.0545	5413.2282	-33.1250	35.0350	975124.2289	1820103.6581			47.2700	-0.020000
F-6	873+41.7400	-33.5100	5413.0473	5413.2118	-33.1250	44.4520	975132.5467	1820108.0769			56.7200	-0.020000
F-7	873+51.2000	-33.5600	5413.0348	5413.1746	-33.1250	53.8690	975140.8629	1820112.4950			66.1800	-0.020000
F-8	873+60.6500	-33.6000	5413.0167	5413.1188	-33.1250	63.2860	975149.1792	1820116.9130			75.6300	-0.020000
F-9	873+70.1100	-33.6300	5412.9931	5413.0478	-33.1250	72.7030	975157.4955	1820121.3311			85.0900	-0.020000
Pier 2 Bk	873+79.5600	-33.6500	5412.9639	5412.9639	-33.1250	82.1200	975165.8118	1820125.7491	-33.6500	70°00'32.00"	94.5400	-0.020000
CL Pier 2	873+80.6300	-33.6500	5412.9603		-33.1250	83.1840	975166.7600	1820126.2500	-33.6500	70°00'32.00"	95.6100	-0.020000
Pier 2 Ah	873+81.7000	-33.6500	5412.9566	5412.9566	-33.1250	84.2480	975167.6951	1820126.7497	-33.6500	70°00'32.00"	96.6800	-0.020000
F-1	873+91.1500	-33.6600	5412.9206	5412.9753	-33.1250	93.6650	975176.0118	1820131.1679			106.1300	-0.020000
F-2	874+00.6100	-33.6500	5412.8791	5412.9812	-33.1250	103.0820	975184.3285	1820135.5862			115.5900	-0.020000
F-3	874+10.0600	-33.6400	5412.8320	5412.9718	-33.1250	112.4990	975192.6451	1820140.0045			125.0400	-0.020000
F-4	874+19.5200	-33.6200	5412.7792	5412.9437	-33.1250	121.9160	975200.9618	1820144.4227			134.5000	-0.020000
F-5	874+28.9700	-33.5800	5412.7212	5412.8949	-33.1250	131.3330	975209.2785	1820148.8410			143.9500	-0.020000
F-6	874+38.4300	-33.5400	5412.6573	5412.8237	-33.1250	140.7500	975217.5952	1820153.2593			153.4100	-0.020000
F-7	874+47.8800	-33.4800	5412.5881	5412.7313	-33.1250	150.1670	975225.9118	1820157.6775			162.8600	-0.020000
F-8	874+57.3400	-33.4100	5412.5133	5412.6193	-33.1250	159.5840	975234.2285	1820162.0958			172.3200	-0.020000
F-9	874+66.7900	-33.3400	5412.4328	5412.4909	-33.1250	169.0010	975242.5452	1820166.5140			181.7700	-0.020000
CL Brg 3	874+76.2400	-33.2500	5412.3469	5412.3469	-33.1250	178.4180	975250.8618	1820170.9323	-33.2500	70°00'32.00"	191.2200	-0.020000
BF Abut 3	874+77.8500	-33.2300	5412.3318		-33.1250	180.0150	975252.2700	1820171.6800	-33.2300	70°00'32.00"	192.8300	-0.020000

Girder 10

BENT LINE	STATION	OFFSET	Parallel To Horizontal Control: ELEVATION	ELEV+DL	X	Y	NORTHING	0.250000 FEET BELOW FINISHED GRADE: EASTING	BENT LNTH	SKEW	GIRDER LNTH	CRS-SLP
BF Abut 1	872+86.4400	-25.0000	5413.1694		-25.1250	-10.7360	975080.0600	1820089.2500	-25.0000	70°00'32.00"	-1.6000	-0.020000
CL Brg 1	872+88.0400	-25.0200	5413.1732	5413.1732	-25.1250	-9.1390	975081.4658	1820089.9989	-25.0200	70°00'32.00"	0.0000	-0.020000
F-1	872+97.4800	-25.1300	5413.1922	5413.2503	-25.1250	0.2780	975089.7821	1820094.4169			9.4400	-0.020000
F-2	873+06.9300	-25.2300	5413.2056	5413.3117	-25.1250	9.6950	975098.0984	1820098.8350			18.8900	-0.020000
F-3	873+16.3700	-25.3200	5413.2135	5413.3568	-25.1250	19.1120	975106.4147	1820103.2530			28.3300	-0.020000
F-4	873+25.8200	-25.4000	5413.2159	5413.3823	-25.1250	28.5290	975114.7310	1820107.6711			37.7800	-0.020000
F-5	873+35.2600	-25.4600	5413.2129	5413.3866	-25.1250	37.9460	975123.0458	1820112.0884			47.2200	-0.020000
F-6	873+44.7100	-25.5200	5413.2041	5413.3686	-25.1250	47.3630	975131.3636	1820116.5072			56.6700	-0.020000
F-7	873+54.1500	-25.5700	5413.1898	5413.3296	-25.1250	56.7800	975139.6798	1820120.9253			66.1100	-0.020000
F-8	873+63.6000	-25.6100	5413.1700	5413.2720	-25.1250	66.1970	975147.9961	1820125.3433			75.5600	-0.020000
F-9	873+73.0500	-25.6400	5413.1446	5413.1993	-25.1250	75.6140	975156.3124	1820129.7614			85.0100	-0.020000
Pier 2 Bk	873+82.4900	-25.6500	5413.1138	5413.1138	-25.1250	85.0310	975164.6287	1820134.1795	-25.6500	70°00'32.00"	94.4500	-0.020000
CL Pier 2	873+83.5600	-25.6500	5413.1100		-25.1250	86.0950	975165.5700	1820134.6800	-25.6500	70°00'32.00"	95.5200	-0.020000
Pier 2 Ah	873+84.6300	-25.6500	5413.1061	5413.1061	-25.1250	87.1590	975166.5120	1820135.1800	-25.6500	70°00'32.00"	96.5900	-0.020000
F-1	873+94.0700	-25.6600	5413.0683	5413.1231	-25.1250	96.5760	975174.8287	1820139.5983			106.0300	-0.020000
F-2	874+03.5200	-25.6500	5413.0252	5413.1272	-25.1250	105.9930	975183.1454	1820144.0165			115.4800	-0.020000
F-3	874+12.9600	-25.6300	5412.9765	5413.1163	-25.1250	115.4100	975191.4620	1820148.4348			124.9200	-0.020000
F-4	874+22.4100	-25.6100	5412.9220	5413.0865	-25.1250	124.8270	975199.7787	1820152.8530			134.3700	-0.020000
F-5	874+31.8600	-25.5700	5412.8622	5413.0360	-25.1250	134.2440	975208.0954	1820157.2713			143.8200	-0.020000
F-6	874+41.3000	-25.5200	5412.7969	5412.9633	-25.1250	143.6610	975216.4121	1820161.6896			153.2600	-0.020000
F-7	874+50.7500	-25.4600	5412.7260	5412.8692	-25.1250	153.0780	975224.7287	1820166.1078			162.7100	-0.020000
F-8	874+60.1900	-25.3900	5412.6496	5412.7556	-25.1250	162.4950	975233.0454	1820170.5261			172.1500	-0.020000
F-9	874+69.6400	-25.3100	5412.5675	5412.6257	-25.1250	171.9120	975241.3621	1820174.9444			181.6000	-0.020000
CL Brg 3	874+79.0800	-25.2200	5412.4801	5412.4801	-25.1250	181.3290	975249.6787	1820179.3626	-25.2200	70°00'32.00"	191.0400	-0.020000
BF Abut 3	874+80.6800	-25.2000	5412.4648		-25.1250	182.9260	975251.0900	1520180.1100	-25.2000	70°00'32.00"	192.6400	-0.020000

Girder 11

BENT LINE	STATION	OFFSET	Parallel To Horizontal Control: ELEVATION	ELEV+DL	X	Y	NORTHING	0.250000 FEET BELOW FINISHED GRADE: EASTING	BENT LNTH	SKEW	GIRDER LNTH	CRS-SLP
BF Abut 1	872+89.4500	-17.0300	5413.3365		-17.1250	-7.8260	975078.8700	1820097.6800	-17.0300	70°00'32.00"	-1.6000	-0.020000
CL Brg 1	872+91.0500	-17.0500	5413.3400	5413.3400	-17.1250	-6.2290	975080.2827	1820098.4292	-17.0500	70°00'32.00"	0.0000	-0.020000
F-1	873+00.4900	-17.1600	5413.3571	5413.4152	-17.1250	3.1880	975088.5990	1820102.8472			9.4400	-0.020000
F-2	873+09.9200	-17.2600	5413.3687	5413.4748	-17.1250	12.6050	975096.9153	1820107.2653			18.8700	-0.020000
F-3	873+19.3600	-17.3400	5413.3750	5413.5182	-17.1250	22.0220	975105.2316	1820111.6834			28.3100	-0.020000
F-4	873+28.8000	-17.4200	5413.3755	5413.5419	-17.1250	31.4390	975113.5479	1820116.1014			37.7500	-0.020000
F-5	873+38.2300	-17.4800	5413.3707	5413.5445	-17.1250	40.8560	975121.8627	1820120.5187			47.1800	-0.020000
F-6	873+47.6700	-17.5400	5413.3602	5413.5246	-17.1250	50.2730	975130.1805	1820124.9375			56.6200	-0.020000
F-7	873+57.1100	-17.5800	5413.3443	5413.4841	-17.1250	59.6900	975138.4967	1820129.3556			66.0600	-0.020000
F-8	873+66.5400	-17.6200	5413.3227	5413.4247	-17.1250	69.1070	975146.8130	1820133.7737			75.4900	-0.020000
F-9	873+75.9800	-17.6400	5413.2957	5413.3504	-17.1250	78.5240	975155.1293	1820138.1917			84.9300	-0.020000
Pier 2 Bk	873+85.4200	-17.6600	5413.2630	5413.2630	-17.1250	87.9410	975163.4456	1820142.6098	-17.6600	70°00'32.00"	94.3700	-0.020000
CL Pier 2	873+86.4800	-17.6600	5413.2590		-17.1250	89.0050	975164.3900	1820143.1100	-17.6600	70°00'32.00"	95.4300	-0.020000
Pier 2 Ah	873+87.5500	-17.6600	5413.2549	5413.2549	-17.1250	90.0690	975165.3289	1820143.6103	-17.6600	70°00'32.00"	96.5000	-0.020000
F-1	873+96.9900	-17.6600	5413.2156	5413.2703	-17.1250	99.4860	975173.6456	1820148.0286			105.9400	-0.020000
F-2	874+06.4200	-17.6500	5413.1707	5413.2727	-17.1250	108.9030	975181.9623	1820152.4468			115.3700	-0.020000
F-3	874+15.8600	-17.6300	5413.1203	5413.2601	-17.1250	118.3200	975190.2789	1820156.8651			124.8100	-0.020000
F-4	874+25.3000	-17.6000	5413.0643	5413.2288	-17.1250	127.7370	975198.5956	1820161.2834			134.2500	-0.020000
F-5	874+34.7400	-17.5500	5413.0030	5413.1767	-17.1250	137.1540	975206.9123	1820165.7016			143.6900	-0.020000
F-6	874+44.1700	-17.5000	5412.9360	5413.1024	-17.1250	146.5710	975215.2290	1820170.1199			153.1200	-0.020000
F-7	874+53.6100	-17.4400	5412.8634	5413.0067	-17.1250	155.9880	975223.5456	1820174.5382			162.5600	-0.020000
F-8	874+63.0500	-17.3700	5412.7853	5412.8913	-17.1250	165.4050	975231.8623	1820178.9564			172.0000	-0.020000
F-9	874+72.4800	-17.2900	5412.7017	5412.7598	-17.1250	174.8220	975240.1790	1820183.3747			181.4300	-0.020000
CL Brg 3	874+81.9200	-17.1900	5412.6127	5412.6127	-17.1250	184.2390	975248.4956	1820187.7930	-17.1900	70°00'32.00"	190.8700	-0.020000
BF Abut 3	874+83.5200	-17.1700	5412.5971		-17.1250	185.8360	975249.9100	1820188.5400	-17.1700	70°00'32.00"	192.4700	-0.020000

Girder 12

BENT LINE	STATION	OFFSET	Parallel To Horizontal Control: ELEVATION	ELEV+DL	X	Y	NORTHING	0.250000 FEET BELOW FINISHED GRADE: EASTING	BENT LNTH	SKEW	GIRDER LNTH	CRS-SLP
BF Abut 1	872+92.4600	-9.0700	5413.5028		-9.1250	-4.9160	975077.6900	1820106.1100	-9.0700	70°00'32.00"	-1.6000	-0.020000
CL Brg 1	872+94.0600	-9.0900	5413.5059	5413.5059	-9.1250	-3.3190	975079.0996	1820106.8595	-9.0900	70°00'32.00"	0.0000	-0.020000
F-1	873+03.4900	-9.1900	5413.5215	5413.5796	-9.1250	6.0980	975087.4159	1820111.2776			9.4300	-0.020000
F-2	873+12.9200	-9.2800	5413.5314	5413.6375	-9.1250	15.5150	975095.7322	1820115.6956			18.8600	-0.020000
F-3	873+22.3400	-9.3700	5413.5357	5413.6789	-9.1250	24.9320	975104.0485	1820120.1137			28.2800	-0.020000
F-4	873+31.7700	-9.4400	5413.5346	5413.7010	-9.1250	34.3490	975112.3648	1820124.5318			37.7100	-0.020000
F-5	873+41.2000	-9.5000	5413.5280	5413.7017	-9.1250	43.7660	975120.6796	1820128.9490			47.1400	-0.020000
F-6	873+50.6300	-9.5500	5413.5159	5413.6803	-9.1250	53.1830	975128.9974	1820133.3679			56.5700	-0.020000
F-7	873+60.0500	-9.6000	5413.4980	5413.6378	-9.1250	62.6000	975137.3136	1820137.7859			65.9900	-0.020000
F-8	873+69.4800	-9.6300	5413.4748	5413.5768	-9.1250	72.0170	975145.6299	1820142.2040			75.4200	-0.020000
F-9	873+78.9100	-9.6500	5413.4461	5413.5008	-9.1250	81.4340	975153.9462	1820146.6221			84.8500	-0.020000
Pier 2 Bk	873+88.3400	-9.6600	5413.4118	5413.4118	-9.1250	90.8510	975162.2625	1820151.0401	-9.6600	70°00'32.00"	94.2800	-0.020000
CL Pier 2	873+89.4000	-9.6600	5413.4076		-9.1250	91.9150	975163.2100	1820151.5400	-9.6600	70°00'32.00"	95.3400	-0.020000
Pier 2 Ah	873+90.4700	-9.6600	5413.4033	5413.4033	-9.1250	92.9790	975164.1458	1820152.0406	-9.6600	70°00'32.00"	96.4100	-0.020000
F-1	873+99.9000	-9.6600	5413.3623	5413.4170	-9.1250	102.3960	975172.4625	1820156.4589			105.8400	-0.020000
F-2	874+09.3300	-9.6400	5413.3159	5413.4179	-9.1250	111.8130	975180.7792	1820160.8772			115.2700	-0.020000
F-3	874+18.7500	-9.6200	5413.2638	5413.4036	-9.1250	121.2300	975189.0958	1820165.2954			124.6900	-0.020000
F-4	874+28.1800	-9.5800	5413.2063	5413.3708	-9.1250	130.6470	975197.4125	1820169.7137			134.1200	-0.020000
F-5	874+37.6100	-9.5400	5413.1431	5413.3169	-9.1250	140.0640	975205.7292	1820174.1320			143.5500	-0.020000
F-6	874+47.0400	-9.4900	5413.0744	5413.2408	-9.1250	149.4810	975214.0459	1820178.5502			152.9800	-0.020000
F-7	874+56.4700	-9.4200	5413.0003	5413.1436	-9.1250	158.8980	975222.3625	1820182.9685			162.4100	-0.020000
F-8	874+65.8900	-9.3400	5412.9208	5413.0269	-9.1250	168.3150	975230.6792	1820187.3868			171.8300	-0.020000
F-9	874+75.3200	-9.2600	5412.8355	5412.8936	-9.1250	177.7320	975238.9959	1820191.8050			181.2600	-0.020000
CL Brg 3	874+84.7500	-9.1600	5412.7449	5412.7449	-9.1250	187.1490	975247.3125	1820196.2233	-9.1600	70°00'32.00"	190.6900	-0.020000
BF Abut 3	874+86.3500	-9.1400	5412.7290		-9.1250	188.7460	975248.7200	1820196.9700	-9.1400	70°00'32.00"	192.2900	-0.020000

Girder 13

BENT LINE	STATION	OFFSET	Parallel To Horizontal Control: ELEVATION	ELEV+DL	X	Y	NORTHING	0.250000 FEET BELOW FINISHED GRADE: EASTING	BENT LNTH	SKEW	GIRDER LNTH	CRS-SLP
BF Abut 1	872+95.4700	-1.1000	5413.6687		-1.1250	-2.0050	975076.5100	1820114.5400	-1.1000	70°00'32.00"	-1.6000	-0.020000
CL Brg 1	872+97.0700	-1.1200	5413.6716	5413.6716	-1.1250	-0.4080	975077.9165	1820115.2898	-1.1200	70°00'32.00"	0.0000	-0.020000
F-1	873+06.4800	-1.2200	5413.6852	5413.7433	-1.1250	9.0090	975086.2328	1820119.7079			9.4100	-0.020000
F-2	873+15.9000	-1.3100	5413.6934	5413.7994	-1.1250	18.4260	975094.5491	1820124.1260			18.8300	-0.020000
F-3	873+25.3200	-1.3900	5413.6960	5413.8392	-1.1250	27.8430	975102.8654	1820128.5440			28.2500	-0.020000
F-4	873+34.7400	-1.4600	5413.6931	5413.8595	-1.1250	37.2600	975111.1817	1820132.9621			37.6700	-0.020000
F-5	873+44.1600	-1.5200	5413.6847	5413.8585	-1.1250	46.6770	975119.4965	1820137.3793			47.0900	-0.020000
F-6	873+53.5800	-1.5700	5413.6708	5413.8352	-1.1250	56.0940	975127.8143	1820141.7982			56.5100	-0.020000
F-7	873+63.0000	-1.6100	5413.6514	5413.7912	-1.1250	65.5110	975136.1305	1820146.2163			65.9300	-0.020000
F-8	873+72.4200	-1.6300	5413.6266	5413.7286	-1.1250	74.9280	975144.4468	1820150.6343			75.3500	-0.020000
F-9	873+81.8300	-1.6500	5413.5962	5413.6509	-1.1250	84.3450	975152.7631	1820155.0524			84.7600	-0.020000
Pier 2 Bk	873+91.2500	-1.6600	5413.5602	5413.5602	-1.1250	93.7620	975161.0794	1820159.4704	-1.6600	70°00'32.00"	94.1800	-0.020000
CL Pier 2	873+92.3200	-1.6600	5413.5557		-1.1250	94.8260	975162.0200	1820159.9700	-1.6600	70°00'32.00"	95.2500	-0.020000
Pier 2 Ah	873+93.3800	-1.6600	5413.5513	5413.5513	-1.1250	95.8900	975162.9627	1820160.4710	-1.6600	70°00'32.00"	96.3100	-0.020000
F-1	874+02.8000	-1.6500	5413.5087	5413.5634	-1.1250	105.3070	975171.2794	1820164.8892			105.7300	-0.020000
F-2	874+12.2200	-1.6400	5413.4604	5413.5624	-1.1250	114.7240	975179.5961	1820169.3075			115.1500	-0.020000
F-3	874+21.6400	-1.6100	5413.4067	5413.5465	-1.1250	124.1410	975187.9127	1820173.7258			124.5700	-0.020000
F-4	874+31.0600	-1.5700	5413.3476	5413.5120	-1.1250	133.5580	975196.2294	1820178.1440			133.9900	-0.020000
F-5	874+40.4800	-1.5200	5413.2829	5413.4566	-1.1250	142.9750	975204.5461	1820182.5623			143.4100	-0.020000
F-6	874+49.9000	-1.4700	5413.2125	5413.3789	-1.1250	152.3920	975212.8628	1820186.9805			152.8300	-0.020000
F-7	874+59.3200	-1.4000	5413.1368	5413.2800	-1.1250	161.8090	975221.1794	1820191.3988			162.2500	-0.020000
F-8	874+68.7300	-1.3200	5413.0556	5413.1617	-1.1250	171.2260	975229.4961	1820195.8171			171.6600	-0.020000
F-9	874+78.1500	-1.2300	5412.9689	5413.0270	-1.1250	180.6430	975237.8128	1820200.2353			181.0800	-0.020000
CL Brg 3	874+87.5700	-1.1300	5412.8766	5412.8766	-1.1250	190.0600	975246.1294	1820204.6536	-1.1300	70°00'32.00"	190.5000	-0.020000
BF Abut 3	874+89.1700	-1.1100	5412.8605		-1.1250	191.6570	975247.5400	1820205.4000	-1.1100	70°00'32.00"	192.1000	-0.020000

NOTE: ELEVATIONS ARE AT TOP OF CONCRETE DECK 3 INCHES BELOW FINISHED GRADE.

POSITIVE ROADWAY CROSS SLOPE IS UPWARDS FROM THE PROFILE GRADE LINE.

THESE STATIONS, COORDINATES, OFFSETS AND LENGTHS DEFINE THE LAYOUT OF THE STRUCTURE IN A TWO DIMENSIONAL HORIZONTAL PLANE. ELEVATIONS DEFINE THE FINAL GRADE OF THE FINISHED CONCRETE DECK. FABRICATION OF STRUCTURAL COMPONENTS THROUGH THE DIRECT USE OF THIS INFORMATION IS NOT INTENDED NOR ADVISABLE.

Design	INITIAL	DATE	Detail	INITIAL	DATE	Quantities	INITIAL	DATE
Designed By	DRH	2/2019	Detailed By	KBK	2/2019	Quantities By	CMA	2/2019
Checked By	SPD	2/2019	Checked By	TLP	2/2019	Checked By	TLP	2/2019

DMADDOCK 2:51:25 PM pw:\\PWAPPDMA001:North_Central_Omaha\Documents\200020\DN0099931\00000000002593892\6.0_CAD_BIM\6.2_Work_In_Progress\NEPA Re-Eval Task\Bridge\Drawings\US85_NEPA_BRDG_DeckElevations_3.dgn

Print Date: 4/15/2021
File Name: US85_NEPA_BRDG_DeckElevations_3.dgn
Horiz. Scale: 1:1 Vert. Scale: As Noted

HDR
1670 BROADWAY, SUITE 3400 DENVER, COLORADO 80202
Phone: 303-764-1520 FAX: 303-860-7139

Sheet Revisions

Date:	Comments	Init.

DOUGLAS COUNTY COLORADO
Department of Public Works Phone: 303-660-7490
Engineering Division Fax: 303-660-9550
100 Third Street
Castle Rock, CO 80104

As Constructed
No Revisions:
Revised:
Void:

US 85 OVER C-470
DECK ELEVATIONS (3 OF 5)

Designer: D HOBBS
Detailer: KATHRINEBERG
Sheet Subset: BRIDGE
Structure Numbers: F-16-ICA
Subset Sheets: 45 of 47

Project No./Code: 0852-114
23474
Sheet Number 301

HCL — Parallel To Horizontal Control — 0.250000 FEET BELOW FINISHED GRADE

BENT LINE	STATION	OFFSET	ELEVATION	ELEV+DL	X	Y	NORTHING	EASTING	BENT LNTH	SKEW	GIRDER LNTH	CRS-SLP
BF Abut 1	872+95.8800	0.0000	5413.9416		0.0000	-1.61000	975076.3400	1820115.7100	0.0000	70°00'32.00"	-1.6100	-0.020000
CL Brg 1	872+97.4900	0.0000	5413.9448	5413.9448	0.0000	0.00000	975077.7500	1820116.4800	0.0000	70°00'32.00"	0.0000	-0.020000
F-1	873+06.7670	0.0000	5413.9600	5414.0181	0.0000	9.27700	975110.3700	1820134.1100			9.2770	-0.020000
F-2	873+16.0440	0.0000	5413.9697	5414.0757	0.0000	18.55400	975085.9000	1820120.9200			18.5540	-0.020000
F-3	873+25.3210	0.0000	5413.9738	5414.1170	0.0000	27.83100	975094.0500	1820125.3400			27.8310	-0.020000
F-4	873+34.5980	0.0000	5413.9724	5414.1388	0.0000	37.10800	975102.2000	1820129.7700			37.1080	-0.020000
F-5	873+43.8750	0.0000	5413.9654	5414.1392	0.0000	46.38500	975110.3700	1820134.1800			46.3850	-0.020000
F-6	873+53.1520	0.0000	5413.9529	5414.1174	0.0000	55.66200	975118.5300	1820138.5900			55.6620	-0.020000
F-7	873+62.4290	0.0000	5413.9348	5414.0747	0.0000	64.93900	975126.7000	1820142.9800			64.9390	-0.020000
F-8	873+71.7060	0.0000	5413.9112	5414.0133	0.0000	74.21600	975134.8800	1820147.3700			74.2160	-0.020000
F-9	873+80.9830	0.0000	5413.8821	5413.9368	0.0000	83.49300	975143.0600	1820151.7400			83.4930	-0.020000
Pier 2 Bk	873+90.2600	0.0000	5413.8474	5413.8474	0.0000	92.77000	975159.4300	1820160.4700	0.0000	70°00'32.00"	92.7700	-0.020000
CL Pier 2	873+92.9200	0.0000	5413.8364		0.0000	95.43000	975161.7800	1820161.7200	0.0000	70°00'32.00"	95.4300	-0.020000
Pier 2 Ah	873+95.5800	0.0000	5413.8250	5413.8250	0.0000	98.09000	975164.1300	1820162.9700	0.0000	70°00'32.00"	98.0900	-0.020000
F-1	874+04.8190	0.0000	5413.7818	5413.8365	0.0000	107.32900	975172.2900	1820167.2900			107.3290	-0.020000
F-2	874+14.0580	0.0000	5413.7330	5413.8351	0.0000	116.56800	975172.2900	1820167.2900			116.5680	-0.020000
F-3	874+23.2970	0.0000	5413.6788	5413.8186	0.0000	125.80700	975180.4600	1820171.6100			125.8070	-0.020000
F-4	874+32.5360	0.0000	5413.6191	5413.7835	0.0000	135.04600	975188.6300	1820175.9200			135.0460	-0.020000
F-5	874+41.7750	0.0000	5413.5538	5413.7276	0.0000	144.28500	975204.9900	1820184.5200			144.2850	-0.020000
F-6	874+51.0140	0.0000	5413.4831	5413.6495	0.0000	153.52400	975204.9900	1820184.5200			153.5240	-0.020000
F-7	874+60.2530	0.0000	5413.4068	5413.5501	0.0000	162.76300	975213.1700	1820188.8000			162.7630	-0.020000
F-8	874+69.4920	0.0000	5413.3251	5413.4312	0.0000	172.00200	975221.3600	1820193.0700			172.0020	-0.020000
F-9	874+78.7310	0.0000	5413.2379	5413.2960	0.0000	181.24100	975229.5600	1820197.3400			181.2410	-0.020000
CL Brg 3	874+87.9700	0.0000	5413.1451	5413.1451	0.0000	190.48000	975245.9600	1820205.8400	0.0000	70°00'32.00"	190.4800	-0.020000
BF Abut 3	874+89.5600	0.0000	5413.1286		0.0000	192.07000	975247.3800	1820206.5700	0.0000	70°00'32.00"	192.0700	-0.020000

Girder 16 — Parallel To Horizontal Control — 0.250000 FEET BELOW FINISHED GRADE

BENT LINE	STATION	OFFSET	ELEVATION	ELEV+DL	X	Y	NORTHING	EASTING	BENT LNTH	SKEW	GIRDER LNTH	CRS-SLP
BF Abut 1	873+04.4500	22.8000	5414.1627		22.8750	6.7260	975072.9600	1820139.8300	22.8000	70°00'32.00"	-1.5900	0.020000
CL Brg 1	873+06.0400	22.7800	5414.1646	5414.1646	22.8750	8.3230	975074.3672	1820140.5808	22.7800	70°00'32.00"	0.0000	0.020000
F-1	873+15.4300	22.6900	5414.1730	5414.2311	22.8750	17.7400	975082.6835	1820144.9989			9.3900	0.020000
F-2	873+24.8300	22.6100	5414.1759	5414.2820	22.8750	27.1570	975090.9998	1820149.4169			18.7900	0.020000
F-3	873+34.2200	22.5400	5414.1733	5414.3166	22.8750	36.5740	975099.3161	1820153.8350			28.1800	0.020000
F-4	873+43.6100	22.4800	5414.1653	5414.3317	22.8750	45.9910	975107.6324	1820158.2530			37.5700	0.020000
F-5	873+53.0000	22.4300	5414.1518	5414.3255	22.8750	55.4080	975115.9472	1820162.6703			46.9600	0.020000
F-6	873+62.4000	22.4000	5414.1329	5414.2974	22.8750	64.8250	975124.2650	1820167.0892			56.3600	0.020000
F-7	873+71.7900	22.3700	5414.1084	5414.2482	22.8750	74.2420	975132.5812	1820171.5072			65.7500	0.020000
F-8	873+81.1800	22.3500	5414.0784	5414.1804	22.8750	83.6590	975140.8975	1820175.9253			75.1400	0.020000
F-9	873+90.5700	22.3400	5414.0429	5414.0977	22.8750	93.0760	975149.2138	1820180.3433			84.5300	0.020000
Pier 2 Bk	873+99.9700	22.3400	5414.0019	5414.0019	22.8750	102.4930	975157.5301	1820184.7614	22.3400	70°00'32.00"	93.9300	0.020000
CL Pier 2	874+01.0300	22.3500	5413.9972		22.8750	103.5570	975158.4700	1820185.2600	22.3500	70°00'32.00"	94.9900	0.020000
Pier 2 Ah	874+02.0900	22.3500	5413.9921	5413.9921	22.8750	104.6210	975159.4134	1820185.7619	22.3500	70°00'32.00"	96.0500	0.020000
F-1	874+11.4800	22.3600	5413.9444	5413.9991	22.8750	114.0380	975167.7301	1820190.1802			105.4400	0.020000
F-2	874+20.8700	22.3900	5413.8914	5413.9934	22.8750	123.4550	975176.0468	1820194.5985			114.8300	0.020000
F-3	874+30.2700	22.4200	5413.8326	5413.9724	22.8750	132.8720	975184.3634	1820199.0167			124.2300	0.020000
F-4	874+39.6600	22.4700	5413.7686	5413.9331	22.8750	142.2890	975192.6801	1820203.4350			133.6200	0.020000
F-5	874+49.0500	22.5300	5413.6992	5413.8729	22.8750	151.7060	975200.9968	1820207.8533			143.0100	0.020000
F-6	874+58.4400	22.6000	5413.6242	5413.7906	22.8750	161.1230	975209.3135	1820212.2715			152.4000	0.020000
F-7	874+67.8400	22.6700	5413.5435	5413.6868	22.8750	170.5400	975217.6301	1820216.6898			161.8000	0.020000
F-8	874+77.2300	22.7600	5413.4576	5413.5637	22.8750	179.9570	975225.9468	1820221.1080			171.1900	0.020000
F-9	874+86.6200	22.8600	5413.3662	5413.4243	22.8750	189.3740	975234.2635	1820225.5263			180.5800	0.020000
CL Brg 3	874+96.0100	22.9700	5413.2693	5413.2693	22.8750	198.7910	975242.5801	1820229.9446	22.9700	70°00'32.00"	189.9700	0.020000
BF Abut 3	874+97.6000	22.9900	5413.2524		22.8750	200.3880	975243.9900	1820230.6900	22.9900	70°00'32.00"	191.5600	0.020000

Girder 14 — Parallel To Horizontal Control — 0.250000 FEET BELOW FINISHED GRADE

BENT LINE	STATION	OFFSET	ELEVATION	ELEV+DL	X	Y	NORTHING	EASTING	BENT LNTH	SKEW	GIRDER LNTH	CRS-SLP
BF Abut 1	872+98.4700	6.8600	5413.8338		6.8750	0.9050	975075.3200	1820122.9700	6.8600	70°00'32.00"	-1.5900	0.020000
CL Brg 1	873+00.0600	6.8500	5413.8366	5413.8366	6.8750	2.5020	975076.7334	1820123.7202	6.8500	70°00'32.00"	0.0000	0.020000
F-1	873+09.4700	6.7500	5413.8484	5413.9065	6.8750	11.9190	975085.0497	1820128.1382			9.4100	0.020000
F-2	873+18.8800	6.6600	5413.8547	5413.9608	6.8750	21.3360	975093.3660	1820132.5563			18.8200	0.020000
F-3	873+28.2900	6.5900	5413.8557	5413.9990	6.8750	30.7530	975101.6823	1820136.9743			28.2300	0.020000
F-4	873+37.7000	6.5200	5413.8511	5414.0175	6.8750	40.1700	975109.9986	1820141.3924			37.6400	0.020000
F-5	873+47.1100	6.4600	5413.8409	5414.0146	6.8750	49.5870	975118.3134	1820145.8097			47.0500	0.020000
F-6	873+56.5200	6.4200	5413.8254	5413.9898	6.8750	59.0040	975126.6312	1820150.2285			56.4600	0.020000
F-7	873+65.9300	6.3800	5413.8042	5413.9440	6.8750	68.4210	975134.9474	1820154.6466			65.8700	0.020000
F-8	873+75.3400	6.3600	5413.7777	5413.8797	6.8750	77.8380	975143.2637	1820159.0646			75.2800	0.020000
F-9	873+84.7500	6.3500	5413.7457	5413.8004	6.8750	87.2550	975151.5800	1820163.4827			84.6900	0.020000
Pier 2 Bk	873+94.1600	6.3400	5413.7080	5413.7080	6.8750	96.6720	975159.8963	1820167.9008	6.3400	70°00'32.00"	94.1000	0.020000
CL Pier 2	873+95.2300	6.3400	5413.7033		6.8750	97.7360	975160.8400	1820168.4000	6.3400	70°00'32.00"	95.1700	0.020000
Pier 2 Ah	873+96.2900	6.3400	5413.6987	5413.6987	6.8750	98.8000	975161.7796	1820168.9013	6.3400	70°00'32.00"	96.2300	0.020000
F-1	874+05.7000	6.3500	5413.6544	5413.7091	6.8750	108.2170	975170.0963	1820173.3195			105.6400	0.020000
F-2	874+15.1100	6.3700	5413.6045	5413.7066	6.8750	117.6340	975178.4130	1820177.7378			115.0500	0.020000
F-3	874+24.5200	6.4000	5413.5492	5413.6890	6.8750	127.0510	975186.7296	1820182.1561			124.4600	0.020000
F-4	874+33.9300	6.4400	5413.4884	5413.6528	6.8750	136.4680	975195.0463	1820186.5743			133.8700	0.020000
F-5	874+43.3400	6.4900	5413.4220	5413.5958	6.8750	145.8850	975203.3630	1820190.9926			143.2800	0.020000
F-6	874+52.7500	6.5500	5413.3502	5413.5166	6.8750	155.3020	975211.6797	1820195.4109			152.6900	0.020000
F-7	874+62.1600	6.6300	5413.2730	5413.4163	6.8750	164.7190	975219.9963	1820199.8291			162.1000	0.020000
F-8	874+71.5700	6.7100	5413.1902	5413.2962	6.8750	174.1360	975228.3130	1820204.2474			171.5100	0.020000
F-9	874+80.9800	6.8000	5413.1018	5413.1599	6.8750	183.5530	975236.6297	1820208.6657			180.9200	0.020000
CL Brg 3	874+90.3900	6.9000	5413.0079	5413.0079	6.8750	192.9700	975244.9463	1820213.0839	6.9000	70°00'32.00"	190.3300	0.020000
BF Abut 3	874+91.9800	6.9200	5412.9915		6.8750	194.5670	975246.3600	1820213.8300	6.9200	70°00'32.00"	191.9200	0.020000

Girder 17 — Parallel To Horizontal Control — 0.250000 FEET BELOW FINISHED GRADE

BENT LINE	STATION	OFFSET	ELEVATION	ELEV+DL	X	Y	NORTHING	EASTING	BENT LNTH	SKEW	GIRDER LNTH	CRS-SLP
BF Abut 1	873+07.4300	30.7700	5414.3263		30.8750	9.6360	975071.7700	1820148.2600	30.7700	70°00'32.00"	-1.5900	0.020000
CL Brg 1	873+09.0200	30.7600	5414.3281	5414.3281	30.8750	11.2330	975073.1841	1820149.0111	30.7600	70°00'32.00"	0.0000	0.020000
F-1	873+18.4100	30.6700	5414.3347	5414.3928	30.8750	20.6500	975081.5004	1820153.4292			9.3900	0.020000
F-2	873+27.7900	30.5900	5414.3358	5414.4418	30.8750	30.0670	975089.8167	1820157.8472			18.7700	0.020000
F-3	873+37.1700	30.5200	5414.3314	5414.4747	30.8750	39.4840	975098.1330	1820162.2653			28.1500	0.020000
F-4	873+46.5600	30.4700	5414.3218	5414.4882	30.8750	48.9010	975106.4493	1820166.6834			37.5400	0.020000
F-5	873+55.9400	30.4200	5414.3065	5414.4802	30.8750	58.3180	975114.7641	1820171.1006			46.9200	0.020000
F-6	873+65.3200	30.3900	5414.2859	5414.4503	30.8750	67.7350	975123.0819	1820175.5195			56.3000	0.020000
F-7	873+74.7100	30.3600	5414.2596	5414.3994	30.8750	77.1520	975131.3981	1820179.9376			65.6900	0.020000
F-8	873+84.0900	30.3500	5414.2281	5414.3301	30.8750	86.5690	975139.7144	1820184.3556			75.0700	0.020000
F-9	873+93.4800	30.3400	5414.1909	5414.2456	30.8750	95.9860	975148.0307	1820188.7737			84.4600	0.020000
Pier 2 Bk	874+02.8600	30.3500	5414.1484	5414.1484	30.8750	105.4030	975156.3470	1820193.1917	30.3500	70°00'32.00"	93.8400	0.020000
CL Pier 2	874+03.9200	30.3500	5414.1432		30.8750	106.4670	975157.2900	1820193.6900	30.3500	70°00'32.00"	94.9000	0.020000
Pier 2 Ah	874+04.9800	30.3500	5414.1380	5414.1380	30.8750	107.5310	975158.2303	1820194.1923	30.3500	70°00'32.00"	95.9600	0.020000
F-1	874+14.3600	30.3700	5414.0887	5414.1435	30.8750	116.9480	975166.5470	1820198.6105			105.3400	0.020000
F-2	874+23.7500	30.4000	5414.0340	5414.1360	30.8750	126.3650	975174.8637	1820203.0288			114.7300	0.020000
F-3	874+33.1300	30.4400	5413.9738	5414.1136	30.8750	135.7820	975183.1803	1820207.4470			124.1100	0.020000
F-4	874+42.5200	30.4900	5413.9081	5414.0726	30.8750	145.1990	975191.4970	1820211.8653			133.5000	0.020000
F-5	874+51.9000	30.5500	5413.8370	5414.0108	30.8750	154.6160	975199.8137	1820216.2836			142.8800	0.020000
F-6	874+61.2800	30.6200	5413.7604	5413.9268	30.8750	164.0330	975208.1304	1820220.7018			152.2600	0.020000
F-7	874+70.6700	30.7000	5413.6783	5413.8215	30.8750	173.4500	975216.4470	1820225.1201			161.6500	0.020000
F-8	874+80.0500	30.7900	5413.5908	5413.6968	30.8750	182.8670	975224.7637	1820229.5384			171.0300	0.020000
F-9	874+89.4300	30.8900	5413.4978	5413.5559	30.8750	192.2840	975233.0804	1820233.9566			180.4100	0.020000
CL Brg 3	874+98.8100	31.0100	5413.3995	5413.3995	30.8750	201.7010	975241.3970	1820238.3749	31.0100	70°00'32.00"	189.7900	0.020000
BF Abut 3	875+00.4000	31.0300	5413.3823		30.8750	203.2980	975242.8100	1820239.1200	31.0300	70°00'32.00"	191.3800	0.020000

Girder 15 — Parallel To Horizontal Control — 0.250000 FEET BELOW FINISHED GRADE

BENT LINE	STATION	OFFSET	ELEVATION	ELEV+DL	X	Y	NORTHING	EASTING	BENT LNTH	SKEW	GIRDER LNTH	CRS-SLP
BF Abut 1	873+01.4600	14.8300	5413.9986		14.8750	3.8150	975074.1400	1820131.4000	14.8300	70°00'32.00"	-1.6000	0.020000
CL Brg 1	873+03.0600	14.8200	5414.0010	5414.0010	14.8750	5.4120	975075.5503	1820132.1505	14.8200	70°00'32.00"	0.0000	0.020000
F-1	873+12.4600	14.7200	5414.0110	5414.0691	14.8750	14.8290	975083.8666	1820136.5685			9.4000	0.020000
F-2	873+21.8600	14.6400	5414.0157	5414.1218	14.8750	24.2460	975092.1829	1820140.9866			18.8000	0.020000
F-3	873+31.2600	14.5600	5414.0147	5414.1580	14.8750	33.6630	975100.4992	1820145.4047			28.2000	0.020000
F-4	873+40.6600	14.5000	5414.0085	5414.1749	14.8750	43.0800	975108.8155	1820149.8227			37.6000	0.020000
F-5	873+50.0600	14.4500	5413.9967	5414.1704	14.8750	52.4970	975117.1303	1820154.2400			47.0000	0.020000
F-6	873+59.4600	14.4100	5413.9794	5414.1439	14.8750	61.9140	975125.4481	1820158.6588			56.4000	0.020000
F-7	873+68.8600	14.3700	5413.9565	5414.0963	14.8750	71.3310	975133.7643	1820163.0769			65.8000	0.020000
F-8	873+78.2600	14.3500	5413.9282	5414.0302	14.8750	80.7480	975142.0806	1820167.4950			75.2000	0.020000
F-9	873+87.6700	14.3400	5413.8944	5413.9492	14.8750	90.1650	975150.3969	1820171.9130			84.6100	0.020000
Pier 2 Bk	873+97.0700	14.3400	5413.8552	5413.8552	14.8750	99.5820	975158.7132	1820176.3311	14.3400	70°00'32.00"	94.0100	0.020000
CL Pier 2	873+98.1300	14.3400	5413.8504		14.8750	100.6460	975159.6600	1820176.8300	14.3400	70°00'32.00"	95.0700	0.020000
Pier 2 Ah	873+99.1900	14.3400	5413.8456	5413.8456	14.8750	101.7100	975160.5965	1820177.3316	14.3400	70°00'32.00"	96.1300	0.020000
F-1	874+08.5900	14.3600	5413.7997	5413.8545	14.8750	111.1270	975168.9132	1820181.7499			105.5300	0.020000
F-2	874+18.0000	14.3800	5413.7482	5413.8502	14.8750	120.5440	975177.2299	1820186.1681			114.9400	0.020000
F-3	874+27.4000	14.4100	5413.6911	5413.8310	14.8750	129.9610	975185.5465	1820190.5864			124.3400	0.020000
F-4	874+36.8000	14.4600	5413.6288	5413.7933	14.8750	139.3780	975193.8632	1820195.0047			133.7400	0.020000
F-5	874+46.2000	14.5100	5413.5608	5413.7346	14.8750	148.7950	975202.1799	1820199.4229			143.1400	0.020000
F-6	874+55.6000	14.5700	5413.4873	5413.6537	14.8750	158.2120	975210.4966	1820203.8412			152.5400	0.020000
F-7	874+65.0000	14.6500	5413.4085	5413.5518	14.8750	167.6290	975218.8132	1820208.2595			161.9400	0.020000
F-8	874+74.4000	14.7300	5413.3240	5413.4301	14.8750	177.0460	975227.1299	1820212.6777			171.3400	0.020000
F-9	874+83.8000	14.8300	5413.2343	5413.2924	14.8750	186.4630	975235.4466	1820217.0960			180.7400	0.020000
CL Brg 3	874+93.2000	14.9400	5413.1390	5413.1390	14.8750	195.8800	975243.7632	1820221.5143	14.9400	70°00'32.00"	190.1400	0.020000
BF Abut 3	874+94.8000	15.9600	5413.1822		14.8750	197.4770	975245.1700	1820222.2600	15.9600	70°00'32.00"	191.7400	0.020000

Girder 18 — Parallel To Horizontal Control — 0.250000 FEET BELOW FINISHED GRADE

BENT LINE	STATION	OFFSET	ELEVATION	ELEV+DL	X	Y	NORTHING	EASTING	BENT LNTH	SKEW	GIRDER LNTH	CRS-SLP
BF Abut 1	873+10.4100	38.7400	5414.4893		38.8750	12.5460	975070.5900	1820156.6900	38.7400	70°00'32.00"	-1.5900	0.020000
CL Brg 1	873+12.0000	38.7300	5414.4907	5414.4907	38.8750	14.1430	975072.0010	1820157.4415	38.7300	70°00'32.00"	0.0000	0.020000
F-1	873+21.3700	38.6400	5414.4955	5414.5536	38.8750	23.5600	975080.3173	1820161.8595			9.3700	0.020000
F-2	873+30.7500	38.5700	5414.4950	5414.6011	38.8750	32.9770	975088.6336	1820166.2776			18.7500	0.020000
F-3	873+40.1200	38.5000	5414.4889	5414.6322	38.8750	42.3940	975096.9499	1820170.6956			28.1200	0.020000
F-4	873+49.5000	38.4500	5414.4775	5414.6439	38.8750	51.8110	975105.2662	1820175.1137			37.5000	0.020000
F-5	873+58.8700	38.4100	5414.4606	5414.6344	38.8750	61.2280	975113.5810	1820179.5310			46.8700	0.020000
F-6	873+68.2500	38.3800	5414.4383	5414.6027	38.8750	70.6450	975121.8988	1820183.9498			56.2500	0.020000
F-7	873+77.6200	38.3500	5414.4103	5414.5501	38.8750	80.0620	975130.2150	1820188.3679			65.6200	0.020000
F-8	873+87.0000	38.3400	5414.3770	5414.4790	38.8750	89.4790	975138.5313	1820192.7859			75.0000	0.020000
F-9	873+96.3700	38.3400	5414.3383	5414.3930	38.8750	98.8960	975146.8476	1820197.2040			84.3700	0.020000
Pier 2 Bk	874+05.7500	38.3500	5414.2941	5414.2941	38.8750	108.3130	975155.1639	1820201.6221	38.3500	70°00'32.00"	93.7500	0.020000
CL Pier 2	874+06.8100	38.3500	5414.2887		38.8750	109.3770	975156.1100	1820202.1200	38.3500	70°00'32.00"	94.8100	0.020000
Pier 2 Ah	874+07.8700	38.3500	5414.2833	5414.2833	38.8750	110.4410	975157.0472	1820202.6226	38.3500	70°00'32.00"	95.8700	0.020000
F-1	874+17.2400	38.3800	5414.2326	5414.2873	38.8750	119.8580	975165.3639	1820207.0408			105.2400	0.020000
F-2	874+26.6200	38.4100	5414.1761	5414.2782	38.8750	129.2750	975173.6806	1820211.4591			114.6200	0.020000
F-3	874+35.9900	38.4500	5414.1143	5414.2541	38.8750	138.6920	975181.9972	1820215.8774			123.9900	0.020000
F-4	874+45.3700	38.5100	5414.0471	5414.2116	38.8750	148.1090	975190.3139	1820220.2956			133.3700	0.020000
F-5	874+54.7400	38.5700	5413.9744	5414.1481	38.8750	157.5260	975198.6306	1820224.7139			142.7400	0.020000
F-6	874+64.1100	38.6400	5413.8962	5414.0626	38.8750	166.9430	975206.9473	1820229.1322			152.1100	0.020000
F-7	874+73.4900	38.7300	5413.8126	5413.9559	38.8750	176.3600	975215.2639	1820233.5504			161.4900	0.020000
F-8	874+82.8600	38.8200	5413.7235	5413.8296	38.8750	185.7770	975223.5806	1820237.9687			170.8600	0.020000
F-9	874+92.2400	38.9300	5413.6290	5413.6871	38.8750	195.1940	975231.8973	1820242.3870			180.2400	0.020000
CL Brg 3	875+01.6100	39.0400	5413.5289	5413.5289	38.8750	204.6110	975240.2139	1820246.8052	39.0400	70°00'32.00"	189.6100	0.020000
BF Abut 3	875+03.2000	39.0600	5413.5114		38.8750	206.2080	975241.6200	1820247.5500	39.0600	70°00'32.00"	191.2000	0.020000

NOTE: ELEVATIONS ARE AT TOP OF CONCRETE DECK 3 INCHES BELOW FINISHED GRADE.

POSITIVE ROADWAY CROSS SLOPE IS UPWARDS FROM THE PROFILE GRADE LINE.

THESE STATIONS, COORDINATES, OFFSETS AND LENGTHS DEFINE THE LAYOUT OF THE STRUCTURE IN A TWO DIMENSIONAL HORIZONTAL PLANE. ELEVATIONS DEFINE THE FINAL GRADE OF THE FINISHED CONCRETE DECK. FABRICATION OF STRUCTURAL COMPONENTS THROUGH THE DIRECT USE OF THIS INFORMATION IS NOT INTENDED NOR ADVISABLE.

Design	INITIAL	DATE	Detail	INITIAL	DATE	Quantities	INITIAL	DATE
Designed By	DRH	2/2019	Detailed By	KBK	2/2019	Quantities By	CMA	2/2019
Checked By	SPD	2/2019	Checked By	TLP	2/2019	Checked By	TLP	2/2019

pw:\\PWAPPDMA001:North_Central_Omaha\Documents\200020\DN0099931\0000000000259892\6.0_CAD_BIM\6.2_Work_In_Progress\NEPA Re-Eval Task\Bridge\Drawings\US85_NEPA_BRDG_DeckElevations_4.dgn

DMADDOCK 2:51:27 PM

Print Date: 4/15/2021
File Name: US85_NEPA_BRDG_DeckElevations_4.dgn
Horiz. Scale: 1:1 Vert. Scale: As Noted

HDR
1670 BROADWAY, SUITE 3400 DENVER, COLORADO 80202
Phone: 303-764-1520 FAX: 303-860-7139

Sheet Revisions

Date:	Comments	Init.

DOUGLAS COUNTY COLORADO
Department of Public Works Phone: 303-660-7490
Engineering Division Fax: 303-660-9550
100 Third Street
Castle Rock, CO 80104

As Constructed
No Revisions:
Revised:
Void:

US 85 OVER C-470
DECK ELEVATIONS (4 OF 5)

Designer: D HOBBS
Detailer: KATHRINEBERG
Sheet Subset: BRIDGE
Structure Numbers: F-16-ICA
Subset Sheets: 46 of 47

Project No./Code
0852-114
23474
Sheet Number 302

Girder 19

BENT LINE	STATION	OFFSET	Parallel To Horizontal Control ELEVATION	ELEV+DL	X	Y	NORTHING	0.250000 FEET BELOW FINISHED GRADE EASTING	BENT LNTH	SKEW	GIRDER LNTH	CRS-SLP
BF Abut 1	873+13.3800	46.7100	5414.6517		46.8750	15.4570	975069.4100	1820165.1200	46.7100	70°00'32.00"	-1.5900	0.020000
CL Brg 1	873+14.9700	46.7000	5414.6528	5414.6528	46.8750	17.0540	975070.8179	1820165.8718	46.7000	70°00'32.00"	0.0000	0.020000
F-1	873+24.3300	46.6200	5414.6560	5414.7142	46.8750	26.4710	975079.1342	1820170.2898			9.3600	0.020000
F-2	873+33.7000	46.5500	5414.6538	5414.7598	46.8750	35.8880	975087.4505	1820174.7079			18.7300	0.020000
F-3	873+43.0700	46.4900	5414.6460	5414.7893	46.8750	45.3050	975095.7668	1820179.1260			28.1000	0.020000
F-4	873+52.4300	46.4400	5414.6329	5414.7993	46.8750	54.7220	975104.0831	1820183.5440			37.4600	0.020000
F-5	873+61.8000	46.4000	5414.6142	5414.7880	46.8750	64.1390	975112.3979	1820187.9613			46.8300	0.020000
F-6	873+71.1600	46.3700	5414.5902	5414.7546	46.8750	73.5560	975120.7157	1820192.3801			56.1900	0.020000
F-7	873+80.5300	46.3500	5414.5606	5414.7005	46.8750	82.9730	975129.0319	1820196.7982			65.5600	0.020000
F-8	873+89.9000	46.3400	5414.5256	5414.6277	46.8750	92.3900	975137.3482	1820201.2163			74.9300	0.020000
F-9	873+99.2600	46.3400	5414.4852	5414.5400	46.8750	101.8070	975145.6645	1820205.6343			84.2900	0.020000
Pier 2 Bk	874+08.6300	46.3600	5414.4395	5414.4395	46.8750	111.2240	975153.9808	1820210.0524	46.3600	70°00'32.00"	93.6600	0.020000
CL Pier 2	874+09.6900	46.3600	5414.4340		46.8750	112.2880	975154.9200	1820210.5500	46.3600	70°00'32.00"	94.7200	0.020000
Pier 2 Ah	874+10.7500	46.3600	5414.4283	5414.4283	46.8750	113.3520	975155.8641	1820211.0529	46.3600	70°00'32.00"	95.7800	0.020000
F-1	874+20.1100	46.3900	5414.3759	5414.4307	46.8750	122.7690	975164.1808	1820215.4712			105.1400	0.020000
F-2	874+29.4800	46.4200	5414.3178	5414.4198	46.8750	132.1860	975172.4975	1820219.8894			114.5100	0.020000
F-3	874+38.8400	46.4700	5414.2545	5414.3943	46.8750	141.6030	975180.8141	1820224.3077			123.8700	0.020000
F-4	874+48.2100	46.5200	5414.1855	5414.3500	46.8750	151.0200	975189.1308	1820228.7260			133.2400	0.020000
F-5	874+57.5800	46.5900	5414.1113	5414.2850	46.8750	160.4370	975197.4475	1820233.1442			142.6100	0.020000
F-6	874+66.9400	46.6700	5414.0316	5414.1980	46.8750	169.8540	975205.7642	1820237.5625			151.9700	0.020000
F-7	874+76.3100	46.7500	5413.9462	5414.0895	46.8750	179.2710	975214.0808	1820241.9808			161.3400	0.020000
F-8	874+85.6700	46.8500	5413.8557	5413.9618	46.8750	188.6880	975222.3975	1820246.3990			170.7000	0.020000
F-9	874+95.0400	46.9600	5413.7596	5413.8178	46.8750	198.1050	975230.7142	1820250.8173			180.0700	0.020000
CL Brg 3	875+04.4000	47.0800	5413.6582	5413.6582	46.8750	207.5220	975239.0308	1820255.2355	47.0800	70°00'32.00"	189.4300	0.020000
BF Abut 3	875+05.9900	47.1000	5413.6404		46.8750	209.1190	975240.4400	1820255.9800	47.1000	70°00'32.00"	191.0200	0.020000

Girder 20

BENT LINE	STATION	OFFSET	Parallel To Horizontal Control ELEVATION	ELEV+DL	X	Y	NORTHING	0.250000 FEET BELOW FINISHED GRADE EASTING	BENT LNTH	SKEW	GIRDER LNTH	CRS-SLP
BF Abut 1	873+16.3500	54.6900	5414.8137		54.8750	18.3670	975068.2300	1820173.5500	54.6900	70°00'32.00"	-1.5800	0.020000
CL Brg 1	873+17.9300	54.6700	5414.8144	5414.8144	54.8750	19.9640	975069.6348	1820174.3021	54.6700	70°00'32.00"	0.0000	0.020000
F-1	873+27.2900	54.5900	5414.8158	5414.8739	54.8750	29.3810	975077.9511	1820178.7202			9.3600	0.020000
F-2	873+36.6500	54.5300	5414.8119	5414.9180	54.8750	38.7980	975086.2674	1820183.1382			18.7200	0.020000
F-3	873+46.0000	54.4700	5414.8024	5414.9457	54.8750	48.2150	975094.5837	1820187.5563			28.0700	0.020000
F-4	873+55.3600	54.4200	5414.7875	5414.9539	54.8750	57.6320	975102.9000	1820191.9743			37.4300	0.020000
F-5	873+64.7200	54.3900	5414.7673	5414.9411	54.8750	67.0490	975111.2148	1820196.3916			46.7900	0.020000
F-6	873+74.0800	54.3600	5414.7415	5414.9060	54.8750	76.4660	975119.5326	1820200.8105			56.1500	0.020000
F-7	873+83.4300	54.3500	5414.7105	5414.8503	54.8750	85.8830	975127.8488	1820205.2285			65.5000	0.020000
F-8	873+92.7900	54.3400	5414.6738	5414.7758	54.8750	95.3000	975136.1651	1820209.6466			74.8600	0.020000
F-9	874+02.1500	54.3500	5414.6318	5414.6866	54.8750	104.7170	975144.4814	1820214.0646			84.2200	0.020000
Pier 2 Bk	874+11.5100	54.3600	5414.5842	5414.5842	54.8750	114.1340	975152.7977	1820218.4827	54.3600	70°00'32.00"	93.5800	0.020000
CL Pier 2	874+12.5600	54.3600	5414.5785		54.8750	115.1980	975153.7400	1820218.9800	54.3600	70°00'32.00"	94.6300	0.020000
Pier 2 Ah	874+13.6200	54.3700	5414.5729	5414.5729	54.8750	116.2620	975154.6810	1820219.4832	54.3700	70°00'32.00"	95.6900	0.020000
F-1	874+22.9800	54.4000	5414.5187	5414.5735	54.8750	125.6790	975162.9977	1820223.9015			105.0500	0.020000
F-2	874+32.3400	54.4300	5414.4590	5414.5610	54.8750	135.0960	975171.3144	1820228.3198			114.4100	0.020000
F-3	874+41.6900	54.4800	5414.3940	5414.5339	54.8750	144.5130	975179.6310	1820232.7380			123.7600	0.020000
F-4	874+51.0500	54.5400	5414.3236	5414.4880	54.8750	153.9300	975187.9477	1820237.1563			133.1200	0.020000
F-5	874+60.4100	54.6100	5414.2477	5414.4214	54.8750	163.3470	975196.2644	1820241.5745			142.4800	0.020000
F-6	874+69.7600	54.6900	5414.1664	5414.3329	54.8750	172.7640	975204.5811	1820245.9928			151.8300	0.020000
F-7	874+79.1200	54.7800	5414.0797	5414.2229	54.8750	182.1810	975212.8977	1820250.4111			161.1900	0.020000
F-8	874+88.4800	54.8800	5413.9874	5414.0935	54.8750	191.5980	975221.2144	1820254.8293			170.5500	0.020000
F-9	874+97.8300	55.0000	5413.8901	5413.9482	54.8750	201.0150	975229.5311	1820259.2476			179.9000	0.020000
CL Brg 3	875+07.1900	55.1200	5413.7870	5413.7870	54.8750	210.4320	975237.8477	1820263.6659	55.1200	70°00'32.00"	189.2600	0.020000
BF Abut 3	875+08.7800	55.1400	5414.5785		54.8750	212.0290	975239.2600	1820264.4100	55.1400	70°00'32.00"	190.8500	0.020000

Girder 21

BENT LINE	STATION	OFFSET	Parallel To Horizontal Control ELEVATION	ELEV+DL	X	Y	NORTHING	0.250000 FEET BELOW FINISHED GRADE EASTING	BENT LNTH	SKEW	GIRDER LNTH	CRS-SLP
BF Abut 1	873+19.3100	62.6600	5414.9750		62.8750	21.2770	975067.0400	1820181.9800	62.6600	70°00'32.00"	-1.5800	0.020000
CL Brg 1	873+20.8900	62.6500	5414.9755	5414.9755	62.8750	22.8740	975068.4517	1820182.7324	62.6500	70°00'32.00"	0.0000	0.020000
F-1	873+30.2400	62.5700	5414.9751	5415.0251	62.8750	32.2910	975076.7680	1820187.1505			9.3500	0.020000
F-2	873+39.5900	62.5100	5414.9695	5415.0606	62.8750	41.7080	975085.0843	1820191.5685			18.7000	0.020000
F-3	873+48.9400	62.4600	5414.9585	5415.0812	62.8750	51.1250	975093.4006	1820195.9866			28.0500	0.020000
F-4	873+58.2900	62.4100	5414.9418	5415.0844	62.8750	60.5420	975101.7169	1820200.4047			37.4000	0.020000
F-5	873+67.6300	62.3800	5414.9199	5415.0686	62.8750	69.9590	975110.0317	1820204.8219			46.7400	0.020000
F-6	873+76.9800	62.3600	5414.8926	5415.0331	62.8750	79.3760	975118.3495	1820209.2408			56.0900	0.020000
F-7	873+86.3300	62.3400	5414.8596	5414.9787	62.8750	88.7930	975126.6657	1820213.6588			65.4400	0.020000
F-8	873+95.6800	62.3400	5414.8214	5414.9081	62.8750	98.2100	975134.9820	1820218.0769			74.7900	0.020000
F-9	874+05.0300	62.3500	5414.7777	5414.8242	62.8750	107.6270	975143.2983	1820222.4950			84.1400	0.020000
Pier 2 Bk	874+14.3800	62.3700	5414.7286	5414.7286	62.8750	117.0440	975151.6146	1820226.9130	62.3700	70°00'32.00"	93.4900	0.020000
CL Pier 2	874+15.4300	62.3700	5414.7227		62.8750	118.1080	975152.5600	1820227.4100	62.3700	70°00'32.00"	94.5400	0.020000
Pier 2 Ah	874+16.4900	62.3700	5414.7167	5414.7167	62.8750	119.1720	975153.4979	1820227.9135	62.3700	70°00'32.00"	95.6000	0.020000
F-1	874+25.8400	62.4100	5414.6611	5414.7076	62.8750	128.5890	975161.8146	1820232.3318			104.9500	0.020000
F-2	874+35.1900	62.4500	5414.5999	5414.6866	62.8750	138.0060	975170.1313	1820236.7501			114.3000	0.020000
F-3	874+44.5400	62.5000	5414.5332	5414.6524	62.8750	147.4230	975178.4479	1820241.1683			123.6500	0.020000
F-4	874+53.8900	62.5600	5414.4611	5414.6016	62.8750	156.8400	975186.7646	1820245.5866			133.0000	0.020000
F-5	874+63.2300	62.6400	5414.3839	5414.5326	62.8750	166.2570	975195.0813	1820250.0049			142.3400	0.020000
F-6	874+72.5800	62.7200	5414.3010	5414.4436	62.8750	175.6740	975203.3980	1820254.4231			151.6900	0.020000
F-7	874+81.9300	62.8100	5414.2126	5414.3353	62.8750	185.0910	975211.7146	1820258.8414			161.0400	0.020000
F-8	874+91.2800	62.9200	5414.1189	5414.2100	62.8750	194.5080	975220.0313	1820263.2597			170.3900	0.020000
F-9	875+00.6200	63.0300	5414.0198	5414.0698	62.8750	203.9250	975228.3480	1820267.6779			179.7300	0.020000
CL Brg 3	875+09.9700	63.1600	5413.9153	5413.9153	62.8750	213.3420	975236.6646	1820272.0962	63.1600	70°00'32.00"	189.0800	0.020000
BF Abut 3	875+11.5600	63.1800	5413.8970		62.8750	214.9390	975238.0700	1820272.8500	63.1800	70°00'32.00"	190.6700	0.020000

Right Flow Line

BENT LINE	STATION	OFFSET	Parallel To Horizontal Control ELEVATION	ELEV+DL	X	Y	NORTHING	0.250000 FEET BELOW FINISHED GRADE EASTING	BENT LNTH	SKEW	GIRDER LNTH	CRS-SLP
BF Abut 1	873+03.9500	21.5600	5414.1372		21.5300	6.2360	975073.1600	1820138.4200	21.5600	70°00'32.00"	-1.6800	0.020000
CL Brg 1	873+05.6300	21.6900	5414.1422	5414.1422	21.7810	7.9230	975074.5300	1820139.4300	21.6900	70°00'32.00"	0.0000	0.020000
F-1	873+15.0500	22.6400	5414.1717	5414.2217	22.8200	17.4110	972082.3700	1820144.7700			9.4200	0.020000
F-2	873+24.5000	23.0000	5414.1837	5414.2747	23.2560	26.8990	975090.5300	1820149.6000			18.8700	0.020000
F-3	873+33.9700	23.0000	5414.1827	5414.3054	23.3300	36.3870	975098.8800	1820154.1200			28.3400	0.020000
F-4	873+43.4300	23.0000	5414.1759	5414.3185	23.3900	45.8750	975107.2300	1820158.6200			37.8000	0.020000
F-5	873+52.8900	23.0000	5414.1633	5414.3120	23.4400	55.3630	975115.5800	1820163.1200			47.2600	0.020000
F-6	873+62.3600	23.0000	5414.1450	5414.2855	23.4790	64.8510	975123.9400	1820167.6000			56.7300	0.020000
F-7	873+71.9200	23.0000	5414.1206	5414.2398	23.5080	74.3390	975132.3100	1820172.0800			66.2900	0.020000
F-8	873+81.2800	23.0000	5414.0911	5414.1778	23.5260	83.8270	975140.9800	1820176.5500			75.6500	0.020000
F-9	873+90.7400	23.0000	5414.0555	5414.1019	23.5330	93.3150	975149.0600	1820181.0100			85.1100	0.020000
Pier 2 Bk	874+00.2000	23.0000	5414.0141	5414.0141	23.5300	102.8030	975157.4400	1820185.4500	23.0000	70°00'32.00"	94.5700	0.020000
CL Pier 2	874+01.2600	23.0000	5414.0091		23.5290	103.8670	975158.3800	1820185.9500	23.0000	70°00'32.00"	95.6300	0.020000
Pier 2 Ah	874+02.3200	23.0000	5414.0040	5414.0040	23.5280	104.9310	975159.3200	1820186.4500	23.0000	70°00'32.00"	96.6900	0.020000
F-1	874+11.6900	23.0000	5413.9560	5414.0025	23.5120	114.3260	975167.6200	1820190.8400			106.0600	0.020000
F-2	874+21.0600	23.0000	5413.9024	5413.9892	23.4860	123.7210	975175.9300	1820195.2300			115.4300	0.020000
F-3	874+30.4300	23.0000	5413.8432	5413.9623	23.4500	133.1160	975184.2400	1820199.6000			124.8000	0.020000
F-4	874+39.8000	23.0000	5413.7782	5413.9187	23.4030	142.5110	975192.5600	1820203.9700			134.1700	0.020000
F-5	874+49.1700	23.0000	5413.7076	5413.8563	23.3460	151.9060	975200.8900	1820208.3300			143.5400	0.020000
F-6	874+58.5400	23.0000	5413.6314	5413.7740	23.2780	161.3010	975209.2100	1820212.6800			152.9100	0.020000
F-7	874+67.9100	23.0000	5413.5495	5413.6723	23.2000	170.6960	975217.5500	1820217.0100			162.2800	0.020000
F-8	874+77.2800	23.0000	5413.4619	5413.5530	23.1120	180.0910	975225.8900	1820221.3400			171.6500	0.020000
F-9	874+86.6500	23.0000	5413.3687	5413.4187	23.0130	189.4860	975234.2300	1820225.6600			181.0200	0.020000
CL Brg 3	874+96.0200	23.0000	5413.2698	5413.2698	22.9040	198.8810	975242.5800	1820229.9800	23.0000	70°00'32.00"	190.3900	0.020000
BF Abut 3	874+97.6100	23.0000	5413.2525		22.8850	200.4700	975243.9900	1820230.7000	23.0000	70°00'32.00"	191.9800	0.020000

Right Edge of Deck

BENT LINE	STATION	OFFSET	Parallel To Horizontal Control ELEVATION	ELEV+DL	X	Y	NORTHING	0.250000 FEET BELOW FINISHED GRADE EASTING	BENT LNTH	SKEW	GIRDER LNTH	CRS-SLP
BF Abut 1	873+20.5300	65.9600	5415.0416		66.1830	22.4810	975066.5500	1820185.4700	65.9600	70°00'32.00"	-1.5900	0.020000
CL Brg 1	873+22.1200	65.9600	5415.0422	5415.0422	66.1960	24.0820	975067.9600	1820186.2300	65.9600	70°00'32.00"	0.0000	0.020000
F-1	873+31.3200	65.5000	5415.0335	5415.0835	65.8100	33.3410	975076.3300	1820190.2400			9.2000	0.020000
F-2	873+40.6900	65.5000	5415.0284	5415.1195	65.8730	42.7680	975084.6400	1820194.7300			18.5700	0.020000
F-3	873+50.0500	65.5000	5415.0177	5415.1405	65.9250	52.1950	975092.9500	1820199.2000			27.9300	0.020000
F-4	873+59.4100	65.5000	5415.0013	5415.1440	95.9680	61.6220	975101.2600	1820203.6600			37.2900	0.020000
F-5	873+68.7700	65.5000	5414.9793	5415.1280	65.9990	71.0490	975109.5700	1820208.1200			46.6500	0.020000
F-6	873+78.1200	65.5000	5414.9517	5415.0922	66.0210	80.4760	975117.8900	1820212.5600			56.0000	0.020000
F-7	873+87.4700	65.5000	5414.9184	5415.0376	66.0320	89.9030	975126.2000	1820216.9900			65.3500	0.020000
F-8	873+96.8200	65.5000	5414.8795	5414.9663	66.0330	99.3300	975134.5200	1820221.4100			74.7000	0.020000
F-9	874+06.1600	65.5000	5414.8350	5414.8815	66.0230	108.7570	975142.8400	1820225.8100			84.0400	0.020000
Pier 2 Bk	874+15.5000	65.5000	5414.7849	5414.7849	66.0030	118.1840	975151.1600	1820230.2100	65.5000	70°00'32.00"	93.3800	0.020000
CL Pier 2	874+16.5500	65.5000	5414.7789		66.0000	119.2470	975152.1000	1820230.7100	65.5000	70°00'32.00"	94.4300	0.020000
Pier 2 Ah	874+17.6100	65.5000	5414.7728	5414.7728	65.9970	120.3100	975153.0400	1820231.2000	65.5000	70°00'32.00"	95.4900	0.020000
F-1	874+26.9400	65.5000	5414.7159	5414.7624	65.9640	129.6990	975161.3600	1820235.5900			104.8200	0.020000
F-2	874+36.2700	65.5000	5414.6534	5414.7401	65.9210	139.0880	975169.6800	1820239.9600			114.1500	0.020000
F-3	874+45.6000	65.5000	5414.5852	5414.7044	65.8680	148.4770	975178.0100	1820244.3200			123.4800	0.020000
F-4	874+54.9200	65.5000	5414.5115	5414.6520	65.8050	157.8660	975186.3300	1820248.6700			132.8000	0.020000
F-5	874+64.2400	65.5000	5414.4322	5414.5809	65.7310	167.2550	975194.6600	1820253.0100			142.1200	0.020000
F-6	874+73.5600	65.5000	5414.3474	5414.4900	65.6470	176.6440	975202.9900	1820257.3400			151.4400	0.020000
F-7	874+82.8700	65.5000	5414.2570	5414.3798	65.5520	186.0330	975211.3200	1820261.6600			160.7500	0.020000
F-8	874+92.1800	65.5000	5414.1610	5414.2521	65.4480	195.4220	975219.6500	1820265.9700			170.0600	0.020000
F-9	875+01.4800	65.5000	5414.0596	5414.1096	65.3330	204.8110	975227.9800	1820270.2700			179.3600	0.020000
CL Brg 3	875+10.9400	65.9600	5413.9599	5413.9599	65.6640	214.2000	975236.2500	1820275.0300	65.9600	70°00'32.00"	188.8200	0.020000
BF Abut 3	875+12.5200	65.9600	5413.9411		65.6410	215.7880	975237.6700	1820275.7600	65.9600	70°00'32.00"	190.4000	0.020000

NOTE: ELEVATIONS ARE AT TOP OF CONCRETE DECK 3 INCHES BELOW FINISHED GRADE.

POSITIVE ROADWAY CROSS SLOPE IS UPWARDS FROM THE PROFILE GRADE LINE.

THESE STATIONS, COORDINATES, OFFSETS AND LENGTHS DEFINE THE LAYOUT OF THE STRUCTURE IN A TWO DIMENSIONAL HORIZONTAL PLANE. ELEVATIONS DEFINE THE FINAL GRADE OF THE FINISHED CONCRETE DECK. FABRICATION OF STRUCTURAL COMPONENTS THROUGH THE DIRECT USE OF THIS INFORMATION IS NOT INTENDED NOR ADVISABLE.

Design	INITIAL	DATE	Detail	INITIAL	DATE	Quantities	INITIAL	DATE
Designed By	DRH	2/2019	Detailed By	KBK	2/2019	Quantities By	GMA	2/2019
Checked By	SPD	2/2019	Checked By	TLP	2/2019	Checked By	TLP	2/2019

pw:\\PWAPPDMA001:North_Central_Omaha\Documents\200020\DN0009931\0000000000259892\6.0_CAD_BIM\6.2_Work_In_Progress\NEPA Re-Eval Task\Bridge\Drawings\US85_NEPA_BRDG_DeckElevations_5.dgn

DMADDOCK 2:51:28 PM

Print Date: 4/15/2021
File Name: US85_NEPA_BRDG_DeckElevations_5.dgn
Horiz. Scale: 1:1 Vert. Scale: As Noted

HDR 1670 BROADWAY, SUITE 3400 DENVER, COLORADO 80202
Phone: 303-764-1520 FAX: 303-860-7139

Sheet Revisions		
Date:	Comments	Init.

DOUGLAS COUNTY COLORADO
Department of Public Works Phone: 303-660-7490
Engineering Division Fax: 303-660-9550
100 Third Street
Castle Rock, CO 80104

As Constructed
No Revisions:
Revised:
Void:

US 85 OVER C-470
DECK ELEVATIONS (5 OF 5)

Designer: D HOBBS
Detailer: KATHRINEBERG
Sheet Subset: BRIDGE
Structure Numbers: F-16-ICA
Subset Sheets: 47 of 47

Project No./Code
0852-114
23474
Sheet Number 303